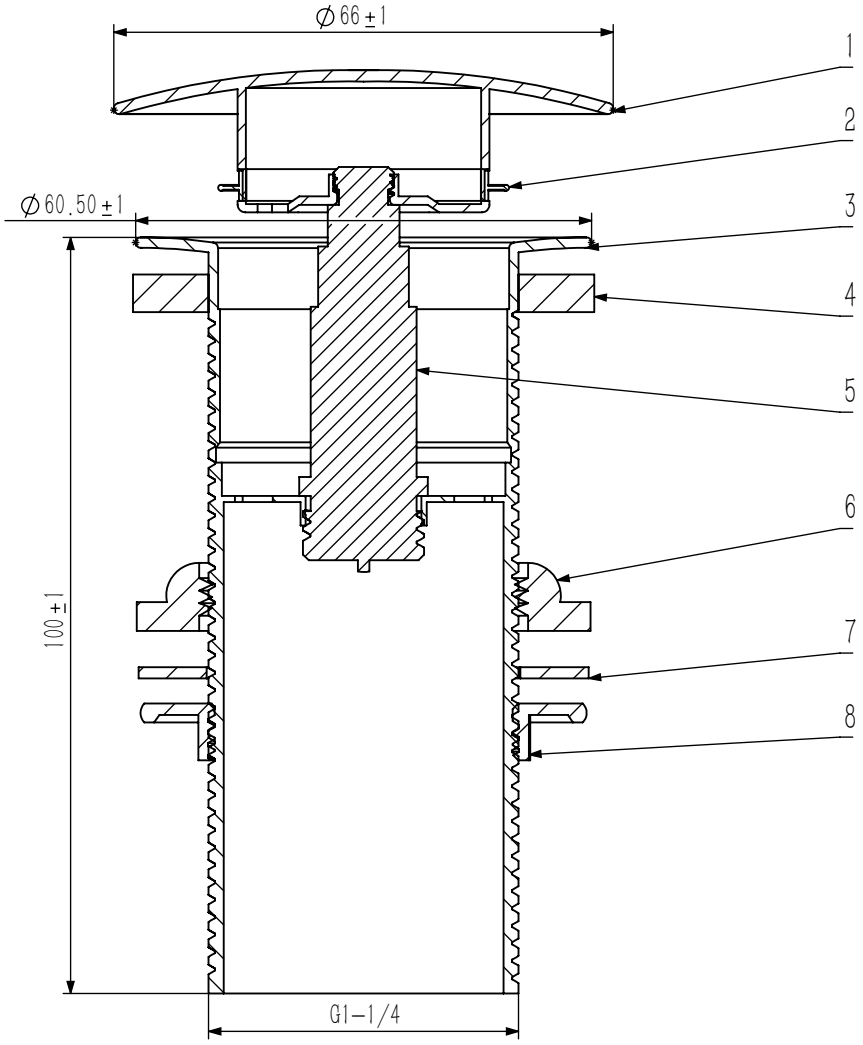


| ITEM | PART NO. | DESCRIPTION | MATERIAL | QTY. | MARK |
|---|---|---|---|---|---|
| 8 | | Nut | HPb57-3 | 1 | BLACK |
| 7 | | Gasket | PE | 1 | WHITE |
| 6 | | Gasket | NBR | 1 | BLACK |
| 5 | | Core | HPb57-3 | 1 | Brass Natural color |
| 4 | | Washer | Foam | 1 | WHITE |
| 3 | | Flange | SS201 | 1 | BLACK |
| 2 | | Gasket | NBR | 1 | BLACK |
| 1 | | Cap | SS201 | 1 | BLACK |

CHROMED WASTE CLIC CLAC
BLACK 100 MM NO
OVERFLOW HEIGHT (mm) 100
EQUATION

2025R03S02-0013