TEST REPORT

ENERGY EFFICIENCY - ELECTRIC FAN

Report Number: **Date of Issue:** **Date of Revise:**	AAWI-EGZ-P23060497 21-Aug-2023 NONE
Testing Laboratory/Address:	Bureau Veritas Consumer Products Services (Guangzhou) Co., Ltd, Science City Branch Rm.101, G5 Building, South China Advanced Materials Innovation Park, No.31 Kefeng Rd, Guangzhou Science City, Guangzhou, 510663 China
Applicant/Address:	GMERIT ELECTRIC MANUFACTURING CO., LTD. The 7th of No.1, Xinxi North Yi Heng Road, Xichong Village, Lunjiao Street, Shunde District, Foshan City, Guangdong Province, P. R. China
Manufacturing Site/Address:	Same as the applicant
Testing Location/Address:	Foshan shunde guoce testing technology Co.,LTD. No.3 East Desheng Road, Shunde Daliang, Foshan, Guangdong, China
Product: **Trade Mark:** **Model(s):** **Model Similarity:** **Ratings:**	Tower Fan N/A FZ30-48WR-LED N/A 220-240V~, 50Hz, 45W
Date of Sample(s) Received: **Date of Test Started:** **Date of Test Finished:**	20-Jun-2023 21-Jun-2023 30-Jun-2023
Standard(s)/Regulation(s):	(EU) No 206/2012 + (EU) No 2016/2282 EN IEC 60879:2019 EN 50564:2011 EN 60704-1:2010 + A11:2012 / EN IEC 60704-1:2021 EN IEC 60704-2-7:2020
Conclusion:	The product tested comply with the ErP requirements.
Prepared by (name, function, signature):	Mickey KONG Engineer
Approved by (name, function, signature):	Jeff ZHANG Performance Manager

Photos:

1. Nameplate showing model number and serial number (if applicable)

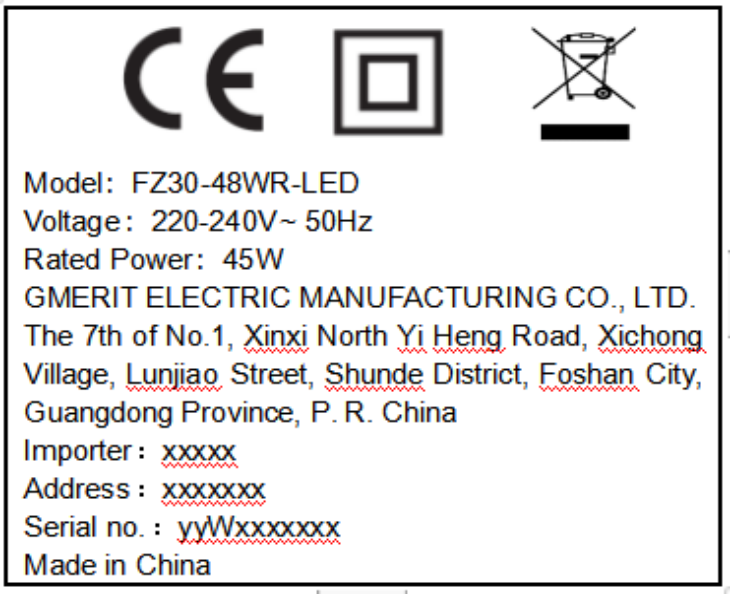

2. Photo of sample.

3. Photo of sample.

4. Photo of sample.

Product Details

Item	Data
Model Number of Unit Under Tested	FZ30-48WR-LED
Serial Number	N/A
Condition of Sample(s)	Production
Type of Fan	Tower fan
Sweep size or equivalent sweep size (for bladeless fan) [mm]	N/A
Number of fan speed	3
Control type of fan speed	Remote control & Electric Button
Oscillation style	Right to Left

Critical Components

Name	Manufacturer / Trademark	Type / Model	Technical data
Fan motor	GMERIT ELECTRIC MANUFACTURING CO., LTD.	DT10CEB	220-240V~, 50Hz, Class B

Ecodesign requirements

Clause	Ecodesign requirements - GENERIC ECODESIGN REQUIREMENTS	Result - Remark	Verdict
2	REQUIREMENTS FOR MAXIMUM POWER CONSUMPTION IN OFF-MODE AND STANDBY MODE		Pass
(a)	From 1 January 2013 comfort fans shall fulfil the requirements on standby and off mode as indicated in Table 2.		Pass
Off mode	Power consumption of equipment in any off-mode condition shall not exceed 1,00 W		N/A
Standby mode	The power consumption of equipment in any condition providing only a reactivation function, or providing only a reactivation function and a mere indication of enabled reactivation function, shall not exceed 1,00 W	0.135W	Pass
	The power consumption of equipment in any condition providing only information or status display, or providing only a combination of reactivation function and information or status display, shall not exceed 2,00 W		N/A
Availability of standby and/or off mode	Equipment shall, except where this is inappropriate for the intended use, provide off mode and/or standby mode, and/or another condition which does not exceed the applicable power consumption requirements for off mode and/or standby mode when the equipment is connected to the mains power source		Pass
(d)	From 1 January 2014 comfort fans shall correspond to requirements as indicated in Table 7		Pass
Off mode	Power consumption of equipment in any off-mode condition shall not exceed 0,50 W		N/A
Standby mode	The power consumption of equipment in any condition providing only a reactivation function, or providing only a reactivation function and a mere indication of enabled reactivation function, shall not exceed 0,50 W	0.135W	Pass
	The power consumption of equipment in any condition providing only information or status display, or providing only a combination of reactivation function and information or status display, shall not exceed 1,00 W		N/A
Availability of standby and/or off mode	Equipment shall, except where this is inappropriate for the intended use, provide off mode and/or standby mode, and/or another condition which does not exceed the applicable power consumption requirements for off mode and/or standby mode when the equipment is connected to the mains power source		Pass

Clause	Ecodesign requirements - GENERIC ECODESIGN REQUIREMENTS	Result - Remark	Verdict
Power management	When equipment is not providing the main function, or when other energy- using product(s) are not dependent on its functions, equipment shall, unless inappropriate for the intended use, offer a power management function, or a similar function, that switches equipment after the shortest possible period of time appropriate for the intended use of the equipment, automatically into: — standby mode, or — off mode, or — another condition which does not exceed the applicable power consumption requirements for off mode and/or standby mode when the equipment is connected to the mains power source. The power management function shall be activated before delivery.		N/A
3	PRODUCT INFORMATION REQUIREMENTS		Pass
(a)	From 1 January 2013, as regards comfort fans, the information set out in points below and calculated in accordance with Annex II shall be provided on:		Pass
(i)	the technical documentation of the product		Pass
(ii)	free access websites of manufacturers of comfort fans		Pass
(b)	The manufacturer of comfort fans shall provide laboratories performing market surveillance checks, upon request, the necessary information on the setting of the unit as applied for the establishment of service values and provide contact information for obtaining such information.		Not check
(e)	Information requirements for comfort fans		Pass
	Manufacturer shall provide information as detailed in the table		Pass

Bladeless fan / tower fan / air cooler

Y-axis	X-axis																			Circle	Airflow
	320	280	240	200	160	120	80	40	0	-40	-80	-120	-160	-200	-240	-280	-320	-360	-400	area	[m³/mi
480								0.52	8.8	6.3	14.38	8.92	21.72							0.0016	0
440						12.59	20.35	27.78	27.36	34.17	27.61	29.19	27.04	15.78	14.18	10.46				0.0016	0.277
400					6	19.84	24.46	27.58	62.18	58.85	69.06	59.73	37.24	47.82	37.55	25.68	16.01			0.0016	0.7202
360					19.45	29.64	30.99	43.48	74.13	78.27	73.58	63.5	64.87	47.55	44.59	36.14	22.94			0.0016	0.9388
320			14.05	11.18	26.06	34.66	49.85	69.8	75.67	77.18	85.18	71.74	61.55	52.83	49.62	34.84	29.12	17.46		0.0016	1.149
280		3.48	27.18	39.06	44.58	63.6	84.96	86.66	92.86	94.91	81.65	74.53	62.66	53.01	47.36	40.98	35.31	26.11	19.85	0.0016	1.5287
240		2.42	24.56	47.58	58.92	71.03	79.05	99.09	116.3	115.7	100.5	77.39	66.79	61.14	56.54	42.83	31.53	20.56		0.0016	1.6782
200		18.87	35.76	44.04	63.42	86.37	95.34	115.6	124.8	121	106.1	98.51	78.73	60.22	52.68	40.01	33.6	20.93		0.0016	1.8499
160		16.49	41.01	50.09	88.61	95.29	117.8	136.4	134	122.3	82.45	97.93	70.44	68.94	54.92	34.33	26.04	21.01		0.0016	1.9529
120	2.14	28.42	49.2	66.83	93.77	114.1	135.4	147.4	134.7	118.5	106.8	68.32	68.02	51.43	53.78	42.36	38.31	5.19		0.0016	2.1078
80	0	28.74	55.38	74.58	98.67	112.7	132.3	152.3	142.9	125.8	93.85	67.87	54.28	47.69	42.87	26.1	14.61	3.42		0.0016	2.0097
40	4.77	32.2	56.52	75.49	97.37	122.6	140.9	159.8	145	126.4	103.2	77.57	56.93	42.07	44.39	33.88	16.17	20.48		0.0016	2.1029
0	14.07	33.65	55.25	72.54	112.7	131.5	153.9	161.5	149.6	130.4	84.79	79.81	48.07	51.05	38.54	8.15	16.8	14.54		0.0016	2.085
-40	2.91	33.09	55.2	68.45	104.7	121.8	144.9	157.7	145.6	135.1	89.96	84.03	61.72	55.71	39.02	31	19.29			0.0016	2.1245
-80	1.57	28.02	54.76	68.42	101.7	113.9	136.7	148.4	145.3	133.7	97.6	82.3	63.47	64.58	50.01	48.01	25.56	14.71		0.0016	2.1799
-120	1.32	24.85	41.68	53.14	94.78	100.3	128.2	141.2	138.3	134.1	94.57	96.46	68.34	80.03	69.54	33.07	35.19	15.89		0.0016	2.1339
-160		23.32	33.4	55.24	76.12	93.21	125.2	125.6	129.9	135.9	111.8	96.78	92.94	78.59	66.86	40.43	29.74	14.63		0.0016	2.0666
-200		8.45	30.51	43.95	67.73	87.7	91.63	122	129.2	126.8	103.4	103.9	83.53	65.78	60.66	34.69	27.34	16.13		0.0016	1.8862
-240		8.41	22.48	38.45	63.78	60.21	80.28	104.9	112.4	126.7	103.7	97.95	85.78	55.59	48.25	62.19	5.27			0.0016	1.6644
-280			11.7	18.7	46.37	57.56	74.04	95.31	95.79	107.3	89.97	83.07	76.6	68.43	45.85	26.95	17.02			0.0016	1.3876
-320				18.63	34.89	44.19	58.2	56.81	63.22	77.46	58.39	71.78	87.22	47.38	58.89	29.16	15.92			0.0016	1.1001
-360					17.85	25.62	36.2	47.53	74.71	43.83	75.66	53.6	41.08	30.17	24.04	9.39				0.0016	0.7239
-400						0.52	22.64	27.88	35.73	55.19	44.08	38.51	27	36.64	12.91					0.0016	0.424
-440								21.71	23.14	26.88	31.33	6.91	2.93	12.39						0.0016	0.0931
-480									6.84	21.53	14.08									0.0016	0

Total airf low [m³/min]:	34.18
Maximum velocity [m/min]:	161.5
Power input [W]:	37.40

Measurements

Standby mode

How is the mode selected or programmed	Connect the product to the power supply.
Providing information or status display	N/A
Sequence of events to reach the mode where the product automatically changes mode	N/A
Any notes regarding the operation of the product	N/A
Ambient temp. in °C	24.1
Test voltage in V	230
Test frequency in Hz	50
Total harmonic distortion of the supply system in %	1.1
Test method	Average reading method
Power in W	0.135

Sound power test

Item	Unit	Value								
Method	--	Parallelepiped measurement surface								
a	*mm*	1150								
b	*mm*	1150								
c	*mm*	1940								
S	*m²*	23.14								
Test setting	-	High speed								
Test voltage	*V*	230.1								
Test frequency	*Hz*	50.0								
Ambient temperature	*°C*	22.4								
Relative humidity	*%*	64.8								
Background noise level	*dB*	17.0								
Microphone	--	1	2	3	4	5	6	7	8	9
L_{pi} (Average)	*dB*	45.17	45.33	43.78	46.94	41.11	38.66	41.48	39.69	36.93
10^0.1Lpi	--	32885	34119	23878	49431	12912	7345	14060	9311	4932
Averaged sound pressure level	*dB(A)*	43.2								
Sound power level	*dB(A)*	56.9								

Co-ordinates of microphone positions:

N°	x	y	z
1	a	0	0,5c
2	0	b	0,5c
3	-a	0	0,5c
4	0	-b	0,5c
5	a	b	c
6	-a	b	c
7	-a	-b	c
8	a	-b	c
9	0	0	c

Measurement surface area:

$S = 2\ (2bc + 2ac + 2ab)$

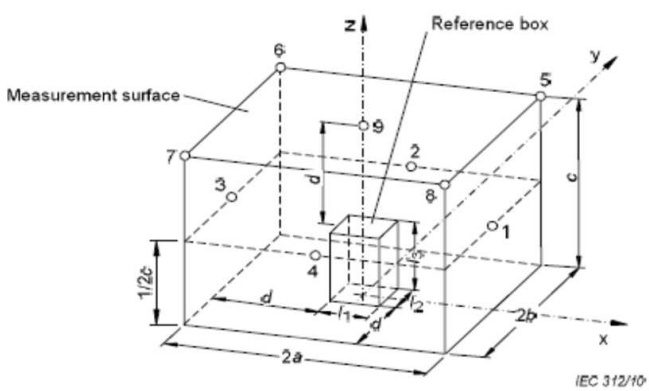

Figure 1 – Measurement surface – parallelepiped – with key microphone positions, for floor free-standing appliances

Conclusion

Item	*Symbol*	*Unit*	Tested	Rated
Maximum fan flow rate	*F*	m^3/min	34.2	-
Fan power input	*P*	*W*	37.4	-
Service value	*SV*	$(m^3/min)/W$	0.9	-
Standby power consumption	P_{SB}	*W*	0.1	-
Seasonal electricity consumption	*Q*	*kWh/a*	12.1	-
Fan sound power level	L_{WA}	*dB(A)*	56.9	-
Maximum air velocity	*c*	*meters/sec*	2.7	-

Revision Summary

Date	Project Handler/ Reviewer	Item	Description of Change
			None