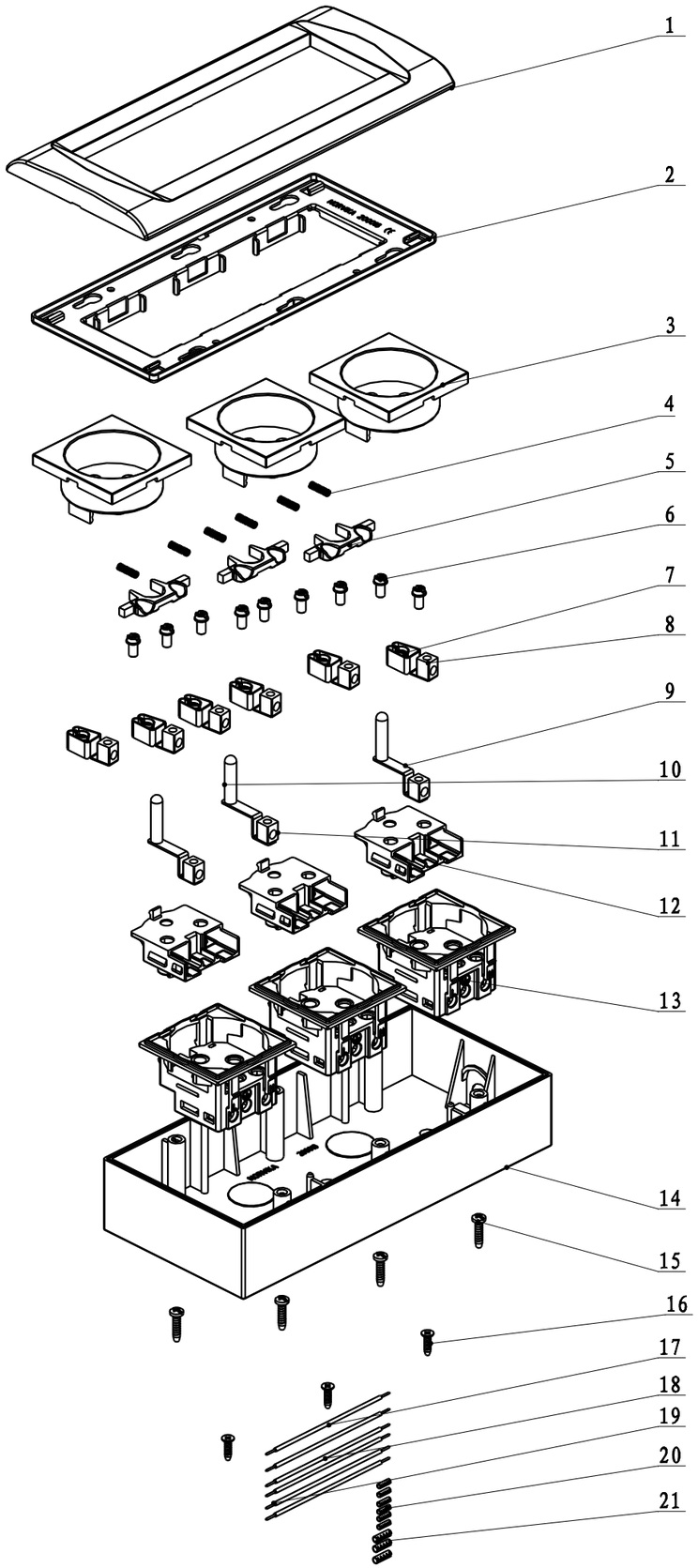

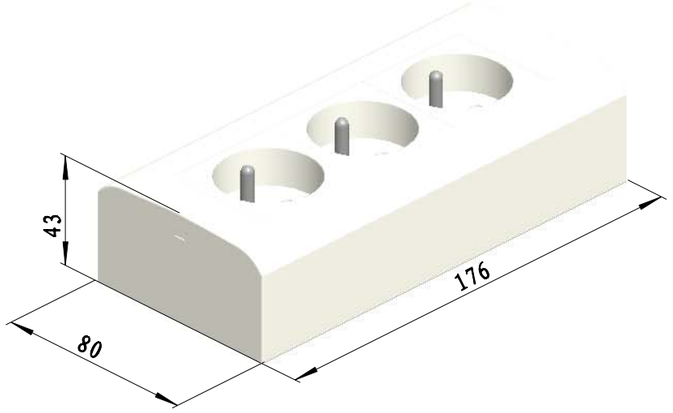

序号	名　称	材　料	规　格	件数	零件代号	借用型号	架　位
21	1.5mm brass tube			3	T6000401		
20	brass tube			6	T6000201		
19	cable (1)	227 IEC 08(RV-90) 1x1.5 red		2	G1501003		
18	cable (2)	227 IEC 08(RV-90) 1x1.5 yellow green		2	G1501004		
17	cable (3)	227 IEC 08(RV-90) 1x1.5 blue		2	G1501007		
16	cross recessed countersunk self tapping screw ST2.6X10	25	ST2.6x12	3	T1802901		
15	cross recessed pan head tapping screw ST2.9X12.5	25		6	T2102701		
14	box	PC+ABS milky white/ grey RAL9023		1	A0406301		
13	base	PA66-GF10 (V0-UL94) black		3	A0022201	080110001	
12	base plate	PA66-GF10 (V0-UL94) blue		3	A0022401	080110001	
11	wiring terminal	brass bar H62 6x6.4rect.		3	E0021101	080110001	
10	earthing rod	brass bar H62 4.8dia.		3	E0021001	080110001	
9	earthing strip	brass plate H62 0.8thk.		3	B0008401	080110001	
8	wiring terminal (2)	brass bar H62 6x6.4rect.		6	E0021201	080110001	
7	terminal block	Tin copper plate QSn6.5-0.1 0.55thk.		6	B0008501	080110001	
6	cross recessed cylindrical head compound screw M3.5X6.8	35		9	T1602401		
5	protection door	PA66-GF25 FR50(+) (F1)		3	A0022301	080110001	
4	spring	piano wire 65Mn 0.28dia.	d=0.28 D=2.75 H0=13.5 n总=12	6	F0069801	080110001	
3	small panel	PC+ABS milky white/ grey RAL9023		3	A0022101	080110001	
2	support	steel plate SPCC8D 1.0thk.		1	B0205501		
1	Panel	PC+ABS milky white/ grey RAL9023		1	A0031701		

标记	处数	更改文件号	签字	日期	产品名称	三联横式墙壁开关	版本号	编制		日期	
					产品型号	080122003	A	校对		日期	
					配件爆炸图			审核		日期	