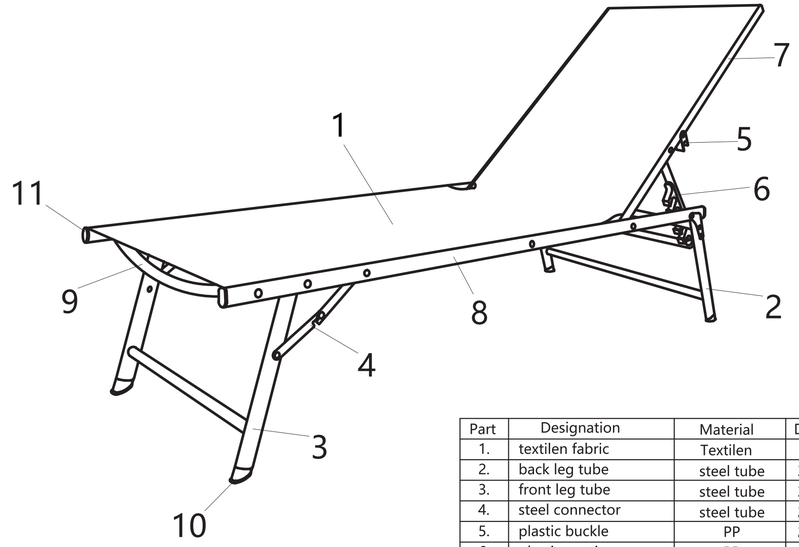

Part	Designation	Material	Dimension	Quantity
1.	textilen fabric	Textilen	1*1	1
2.	back leg tube	steel tube	30*16mm	2
3.	front leg tube	steel tube	30*16mm	2
4.	steel connector	steel tube	20*15mm	2
5.	plastic buckle	PP	25*23mm	2
6.	plastic postion	PP	200*18mm	2
7.	backrest tube	steel tube	25*19mm	2
8.	seat tube	steel tube	30*19mm	2
9.	seat support tube	steel tube	ϕ19mm	3
10.	plastic cap of leg tube	PP	30*16mm	4
11.	plastic cap of seat tube	PP	30*19mm	4

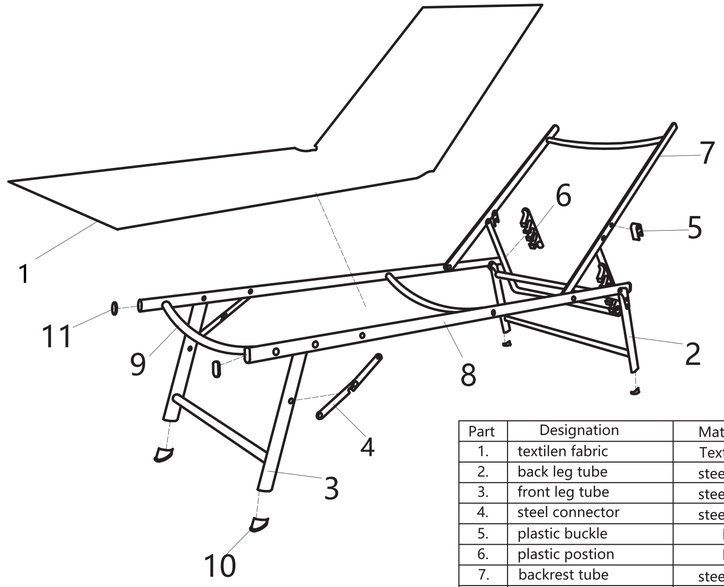

Part	Designation	Material	Dimension	Quantity
1.	textilen fabric	Textilen	1*1	1
2.	back leg tube	steel tube	30*16mm	2
3.	front leg tube	steel tube	30*16mm	2
4.	steel connector	steel tube	20*15mm	4
5.	plastic buckle	PP	25*23mm	2
6.	plastic postion	PP	200*18mm	2
7.	backrest tube	steel tube	25*19mm	2
8.	seat tube	steel tube	30*19mm	2
9.	seat support tube	steel tube	ϕ19mm	3
10.	plastic cap of leg tube	PP	30*16mm	4
11.	plastic cap of seat tube	PP	30*19mm	4