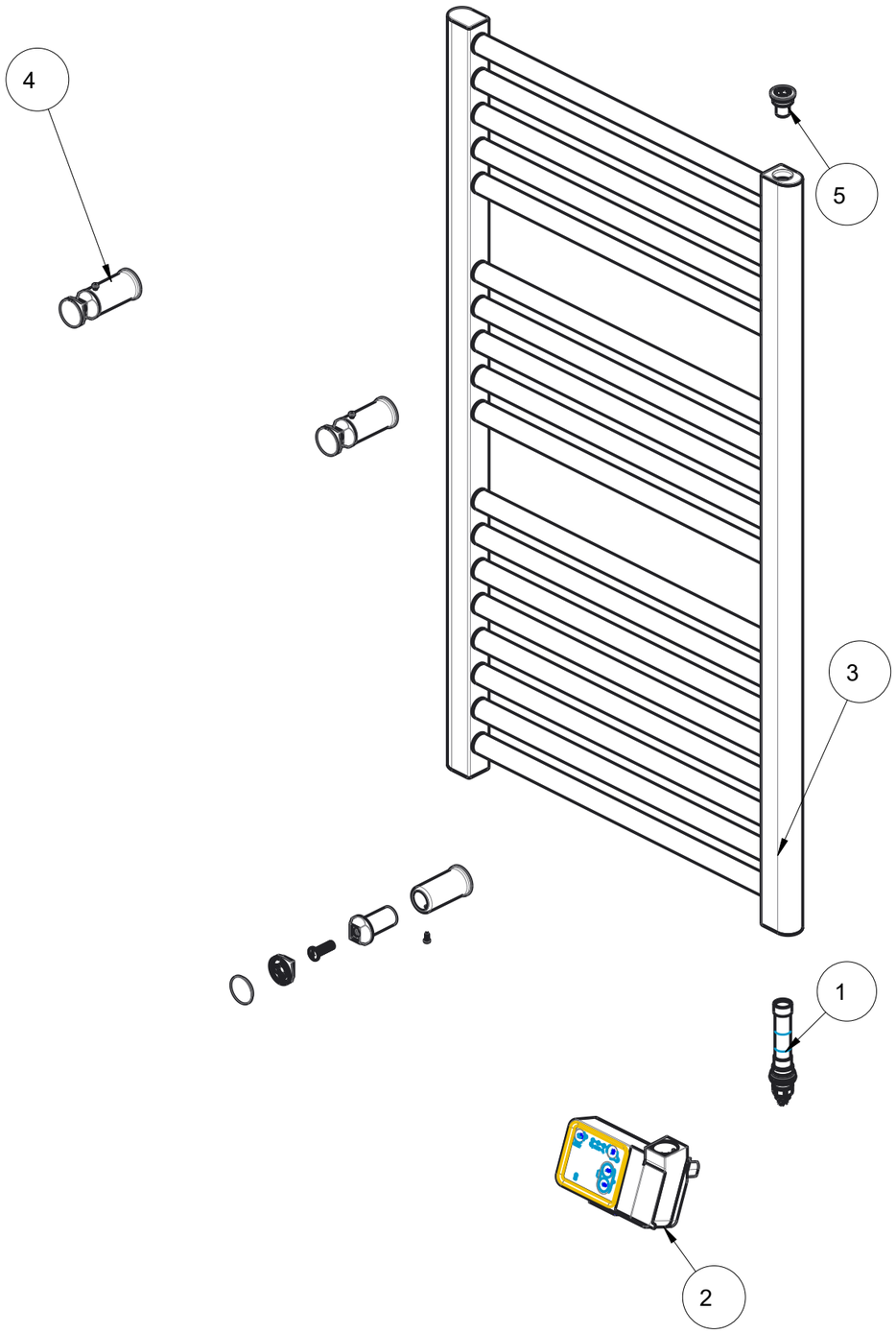


| Rep | Designation | Qty | Commercial code spare parts |
|---|---|---|---|
| 1 | Heating element 500W + O-ring NBR | 1 | |
| 2 | Control Box IC0 500W | 1 | 089132 |
| 3 | FRAME EQU STR WH 500W | 1 | |
| 4 | Bracket kit | 1 | 098871 |
| 4.1 | Cylinder to wall straight (x3) | | |
| 4.2 | Cylinder with clamp (x3) | | |
| 4.3 | Clamp (x3) | | |
| 4.4 | Clamp cover (x3) | | |
| 4.5 | Screw M8x25 (x3) | | |
| 4.6 | Screw 2,9x9,5 (x3) | | |
| 5 | Automatic airvent | 1 | |

| Ind | Date | Modification | Modif/Demand | Modif by |
|---|---|---|---|---|
| _ | _ | _ | _ | _ |
| _ | _ | _ | _ | _ |
| _ | _ | _ | _ | _ |

| | | | | | |
|---|---|---|---|---|---|
| ECET 10th of Ramadan City | Weight: | Material: Colour: | | | |
| GROUPE ATLANTIC | drawn by mmagdy | checked by | status | ERP ID - | folio 1 / |
| creation date 10/09/20 | SFEG EQU STR WH (IC0) 885*500 21R08P03-2 - 594515 | | | PLM ID 00U06925580 | REV. A |
| size A3 | scale 1/6 | | | | |

This drawing can't be, without authorization, neither copied, neither reproduced, or communicated to thirds. Law of July 14, 1909 on the drawings and the models.

10TH OF RAMADAN-EGYPT E.C.E.T GROUP ATLANTIC

08/10/2020