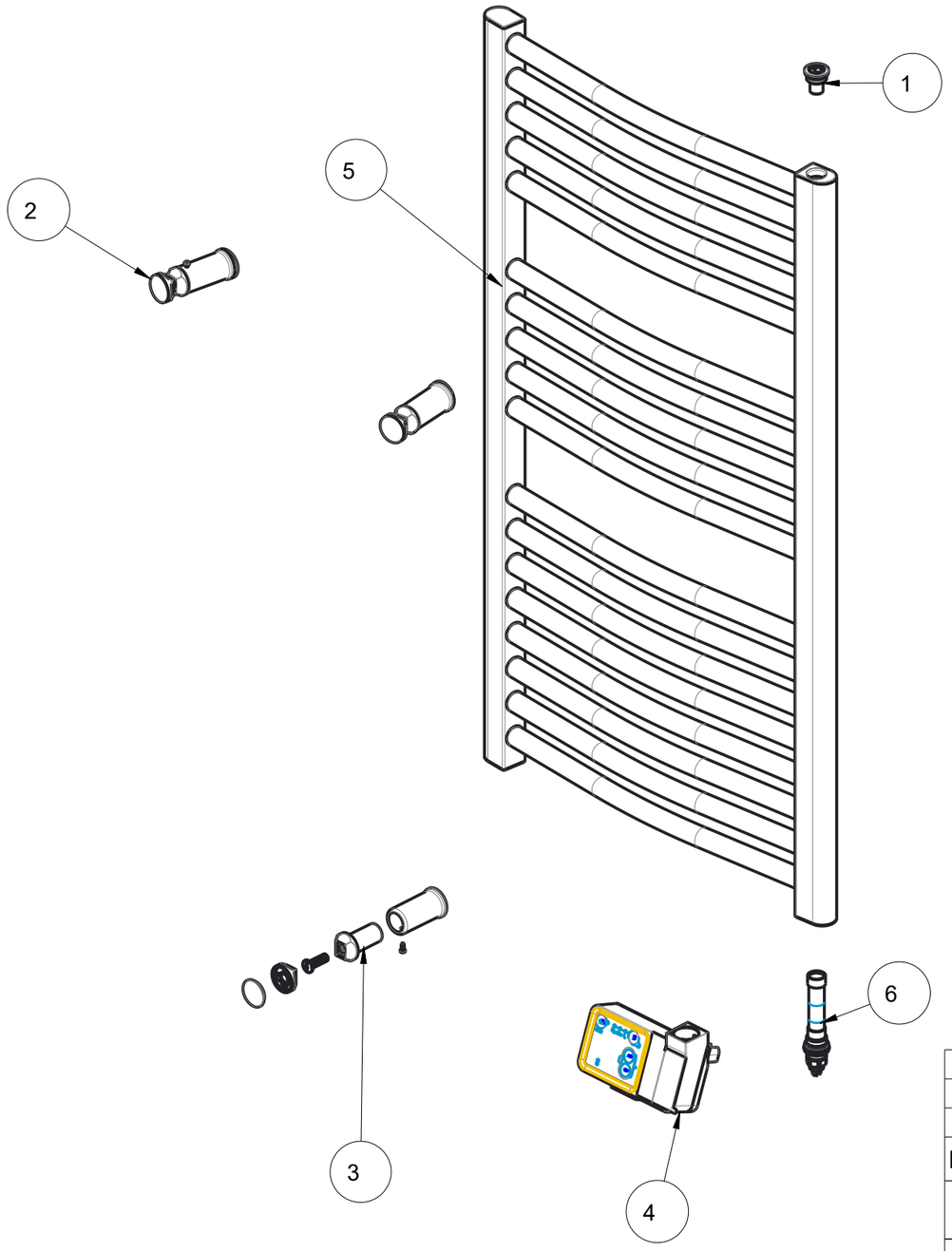

Rep	Designation	Qty	Commercial code spare parts
1	Automatic Airvent	1	
2	Bracket kit curved	1	098872
2.1	Cylinder to wall curved (x2)		
2.2	Cylinder with clamp (x2)		
2.3	Clamp (x2)		
2.4	Clamp cover (x2)		
2.5	Screw M8x25 (x2)		
2.6	Screw 2.9x9.5 (x2)		
3	Bracket kit straight		
3.1	Cylinder to wall straight (x1)		
3.2	Cylinder with clamp (x1)		
3.3	Clamp (x1)		
3.4	Clamp cover (x1)		
3.5	Screw M8x25 (x1)		
3.6	Screw 2,9x9,5 (x1)		
4	Control box IC0 500W	1	089132
5	FRAME EQU CUR WH 500W	1	
6	Heating element 500W + O-ring NBR	1	

Ind	Date	Modification	Modif/Demand	Modif by
_	_	_	_	_
_	_	_	_	_
_	_	_	_	_

ECET 10th of Ramadan City	Weight:	Material: / Colour:			
GROUPE ATLANTIC	drawn by mmagdy	checked by	status	ERP ID -	folio 1 /
creation date 06/08/2020	SFEG EQU CUR WH (IC0) 885*500 21R08P03-4 - 594517			PLM ID 00U06925550	REV. A
size A3	scale 1/6				

This drawing can't be, without authorization, neither copied, neither reproduced, or communicated to thirds. Law of July 14, 1909 on the drawings and the models.

10TH OF RAMADAN-EGYPT E.C.E.T GROUP ATLANTIC

08/10/2020