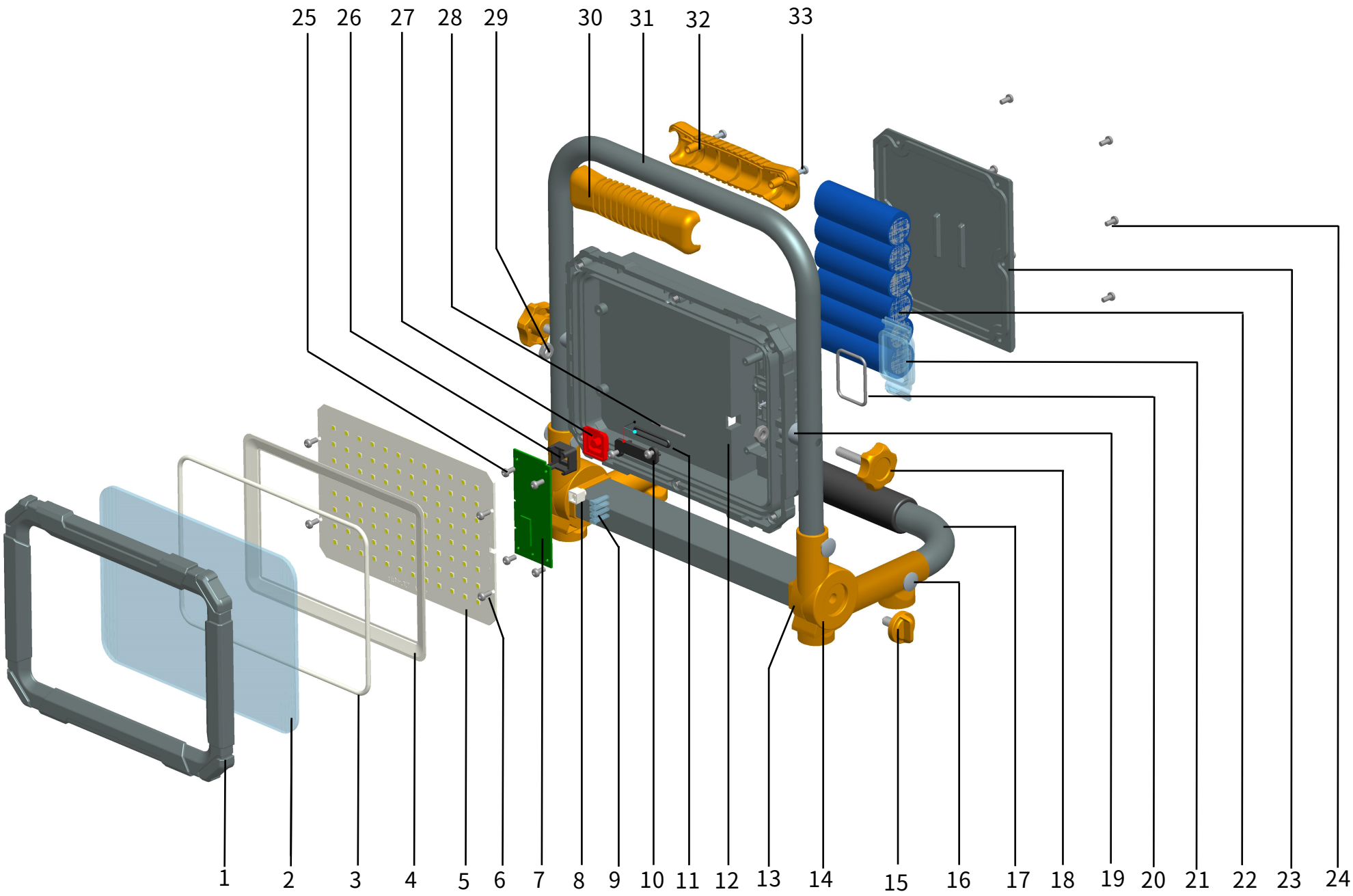

1. (frame)
2. (PC Cover)
3. (rubber ring)
4. (PC reflector)
5. (LED PCB Board)
6. (screws)
7. (PCB control board)
8. (USB output switch button)
9. (capacity indicator light)
10. (Mounting plate)
11. (small rubber ring)
12. (back housing)
13. (plastic knob base A)
14. (plastic knob base B)
15. (plastic knob)
16. (cotter pin)
17. (metal tube)
18. (thumb screw)
19. (plastic stopper)
20. (rubber ring)
21. (waterproof cover)
22. (Li battery)
23. (back housingcover)
24. (screws)
25. (screws)
26. (switch base)
27. (silica switch button)
28. (needle axis)
29. (screws)
30. (front side of handle)
31. (metal tube A)
32. (back side of handle)
33. (screws)