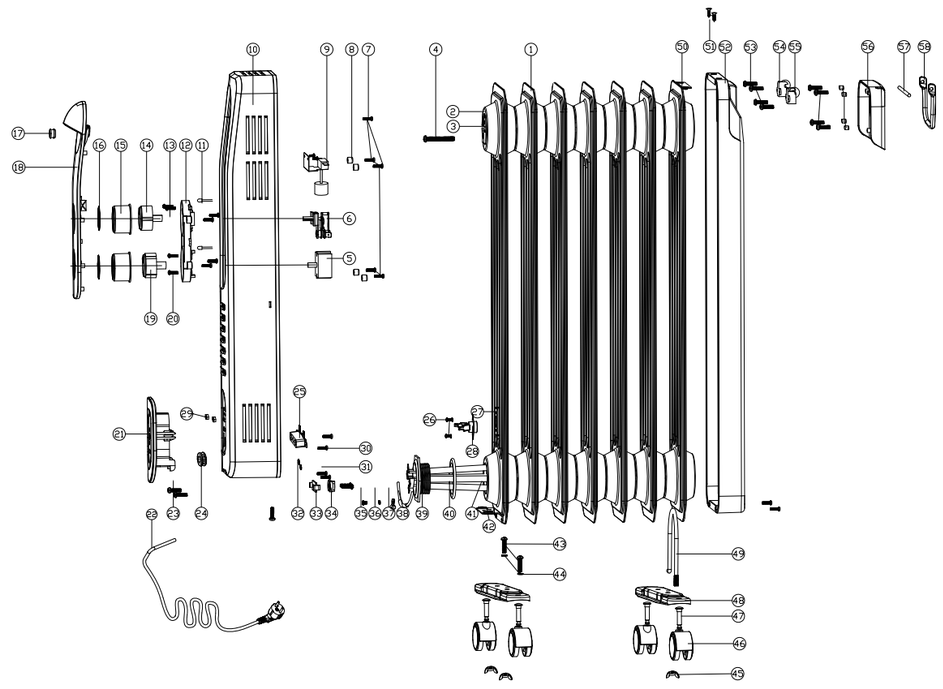

58	Handle	metal	PCS	1	✓	✓	✓	✓
57	Axle	metal	PCS	1	✓	✓	✓	✓
56	Back panel	ABS	PCS	1	✓	✓	✓	✓
55	Right of axle lid	PP	PCS	1	✓	✓	✓	✓
54	Lift of axle lid	PP	PCS	1	✓	✓	✓	✓
53	Screw	BTP3*8	PCS	4	✓	✓	✓	✓
52	Shell	T=0.6 spcc	PCS	1	✓	✓	✓	✓
51	Screw	ST3*12	PCS	2	✓	✓	✓	✓
50	Rear shell bracket	1.2mm spcc	PCS	1	✓	✓	✓	✓
49	U screw	M5	PCS	1	✓	✓	✓	✓
48	Dead plate	1.0mm spcc	PCS	2	✓	✓	✓	✓
47	Truckle axes	A3	PCS	4	✓	✓	✓	✓
46	Truckle	PA66	PCS	4	✓	✓	✓	✓
45	Screw	M5	PCS	3	✓	✓	✓	✓
44	Pad	Φ5	PCS	2	✓	✓	✓	✓
Serial number	Designation	Specification	Unit	Quantity	3276007765960 HD972-A7QL	3276007765991 HD972-A7QL SA	3276007765977 HD972-A7QL BR 220	3276007765984 HD972-A7QL BR 127

43	Screw	M5×18	PCS	2	✓	✓	✓	✓
42	connecting sheet	1.2mm spcc	PCS	1	✓	✓	✓	✓
41	Nut	M42	PCS	1	✓	✓	✓	✓
40	Black lead cushion	graphite	PCS	1	✓	✓	✓	✓
39	Heating tube BR 127V	127V 1500W	PCS	1				✓
	Heating tube BR 220V	220V 1500W	PCS	1			✓	
	Heating tube SA	230V 1500W	PCS	1		✓		
	Heating tube international	230V 1500W	PCS	1	✓			
38	Fuse	250V 15A	PCS	1				✓
		250V 10A	PCS	1	✓	✓	✓	
37	Cable clamp	0.3mm spcc	PCS	1	✓	✓	✓	✓
36	Pad	Φ4	PCS	4	✓	✓	✓	✓
35	Screw	M4×6	PCS	2	✓	✓	✓	✓
34	Press line board	PP	PCS	1	✓	✓	✓	✓
33	Press line cushion	PP	PCS	1	✓	✓	✓	✓
32	Pad	Φ4	PCS	2	✓	✓	✓	✓
31	Screw	BTP4×6	PCS	2	✓	✓	✓	✓
30	Screw	BTP4×15	PCS	3	✓	✓	✓	✓
29	Nut	Φ4	PCS	2	✓	✓	✓	✓
28	Automatic temperature limiter	250v 16A	PCS	1				✓
		250V 10A	PCS	1	✓	✓	✓	
27	stents	0.6mm spcc	PCS	1	✓	✓	✓	✓
26	screw	ST2*3×5 Φ3	PCS	2	✓	✓	✓	✓
25	Stoneware	ceramic	PCS	1	✓	✓	✓	✓
24	Line loop	SPVC	PCS	1	✓	✓	✓	✓
23	Screw	BTP4*6	PCS	5	✓	✓	✓	✓
22	Power plug type N / Power cord	BR 250V~ 16A H05RR-F 3×1.5mm²	PCS	1				✓
	Power plug type X / Power cord	BR 250V~ 16A H05RR-F 3×0.75mm²	PCS	1			✓	
	Power plug type M / Power cord	SA 250V~ 16A H05RR-F 3×0.75mm²	PCS	1		✓		
	Power plug type E / Power cord	VDE 250V~ 16A H05RR-F 3×0.75mm²	PCS	1	✓			
21	Control line board	ABS+PC	PCS	1	✓	✓	✓	✓
20	Screw	BTP3*16	PCS	2	✓	✓	✓	✓
19	Switch knob	ABS	PCS	1	✓	✓	✓	✓
18	Control panel	ABS+PC	PCS	1	✓	✓	✓	✓
17	Strew plug	PVC	PCS	1	✓	✓	✓	✓
16	Knob ornament	CD	PCS	2	✓	✓	✓	✓
15	Knob cover	ABS	PCS	2	✓	✓	✓	✓
14	Temperature knob	ABS+PC	PCS	1	✓	✓	✓	✓
13	Screw	M3×8	PCS	2	✓	✓	✓	✓
12	Switch temperature control bracket	ABS+PC	PCS	1	✓	✓	✓	✓
11	Led Light	LED	PCS	2	✓	✓	✓	✓
10	Control box	0.55mm spcc	PCS	1	✓	✓	✓	✓
9	Tip-over Switch	250V/16A	PCS	1	✓	✓	✓	✓
8	Fixing cap	ABS	PCS	8	✓	✓	✓	✓
7	Screw	BTP3*10	PCS	14	✓	✓	✓	✓
6	Temperature	250V/16A	PCS	1	✓	✓	✓	✓
5	Switch	250V-16A	PCS	1	✓	✓	✓	✓
4	Screw	M5×28	PCS	1	✓	✓	✓	✓
3	Connecting frame	2.0mm spcc	PCS	1	✓	✓	✓	✓
2	Flange	0.8mm spcc	PCS	1	✓	✓	✓	✓
1	Container	0.5mm spcc	PCS	1	✓	✓	✓	✓
Serial number	Designation	Specification	Unit	Quantity	3276007765960 HD972-A7QL	3276007765991 HD972-A7QL SA	3276007765977 HD972-A7QL BR 220	3276007765984 HD972-A7QL BR 127

Design	Li Yong	Date	2024.03.26	Version V0	CUORI
Charting	Shao Zhouhu			OIL ESSENTIAL 1500W Circuit diagram+Explosive view	HD972-A7QL
Audit	Li Yong				
Technology	Wang Daifko	Approover	Liu Guanghui		

卓力电器集团有限公司
CUORI ELECTRICAL APPLIANCES (GROUP) CO.,LTD.
Authorized Signature

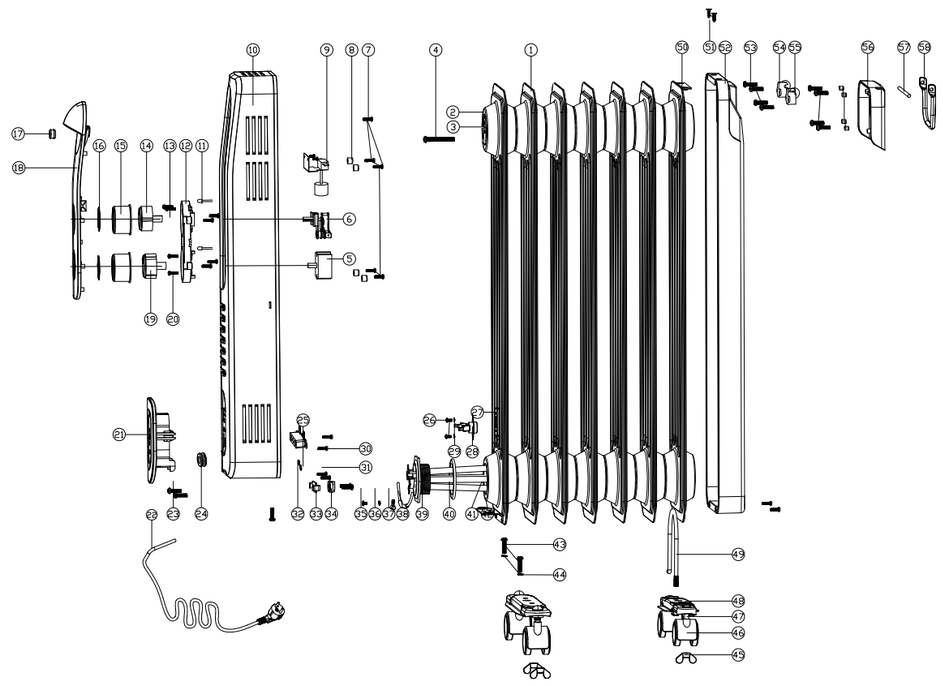

Spare parts

N.	Designation	Matrix Code Technical Code (cuori code)	Serial number	Designation	Specification	Quantity	Unit	3276007765960 HD972-A7QL	3276007765991 HD972-A7QL SA	3276007765977 HD972-A7QL BR 220	3276007765984 HD972-A7QL BR 127
1	WHEELS KIT OIL ESSENTIAL 1500W	To create HD972SP	49	U screw	M5	1	PCS	✓	✓	✓	✓
			48	Dead plate	1.0mm spcc	2	PCS				
			47	Truckle axes	A3	4	PCS				
			46	Truckle	PA66	4	PCS				
			45	Screw	M5	3	PCS				

Products compatibility
Matrix Code
Technical code

卓力电器集团有限公司
CUORI ELECTRICAL APPLIANCES (GROUP) CO.,LTD.
Authorized Signature

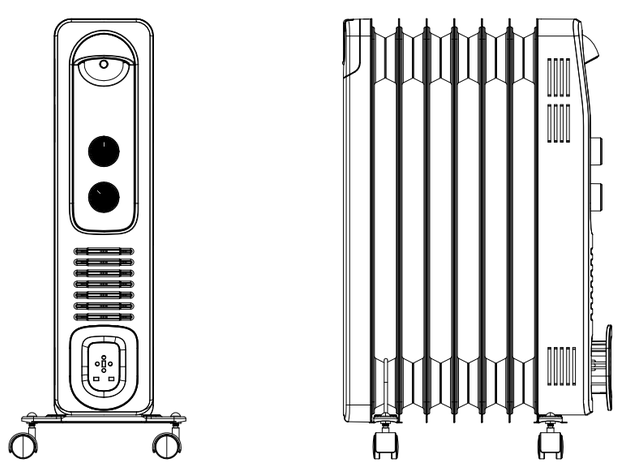

Matrix ID	Designation Short	Matrix Code	Technical Code(cuori code)
2022R08P04-0031	OIL ESSENTIAL - OIL HEATER 1500W WHITE EQUATION	3276007765960	HD972-A7QL
2023R08P06-0248	OIL ESSENTIAL -OIL HEATER 1500W, WHITE, TYPE M PLUG,EQUATION	3276007765991	HD972-A7QL SA
2022R08P04-0123	OIL ESSENTIAL BR - OIL HEATER 1500W 220V WHITE EQUATION	3276007765977	HD972-A7QL BR 220
2022R08P04-0124	OIL ESSENTIAL BR - OIL HEATER 1500W 127V WHITE EQUATION	3276007765984	HD972-A7QL BR 127

circuit diagram

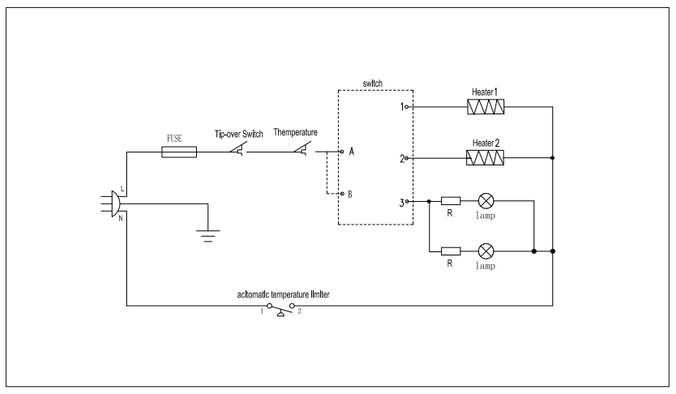

卓力电器集团有限公司
CUORI ELECTRICAL APPLIANCES (GROUP) CO.,LTD.
Authorized Signature