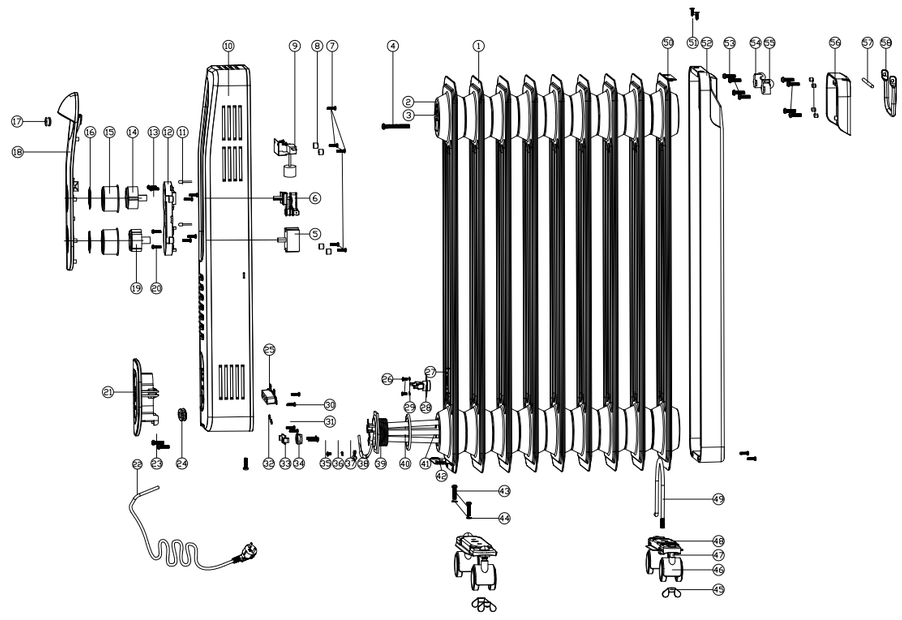

58	Handle	metal	PCS	1	✓	✓	✓
57	Axle	metal	PCS	1	✓	✓	✓
56	Back panel	ABS	PCS	1	✓	✓	✓
55	Right of axle lid	PP	PCS	1	✓	✓	✓
54	Lift of axle lid	PP	PCS	1	✓	✓	✓
53	Screw	BTP3*8	PCS	4	✓	✓	✓
52	Shell	T=0.6 spcc	PCS	1	✓	✓	✓
51	Screw	ST3*12	PCS	2	✓	✓	✓
50	Rear shell bracket	1.2mm spcc	PCS	1	✓	✓	✓
49	U screw	M5	PCS	1	✓	✓	✓
48	Dead plate	1.0mm spcc	PCS	2	✓	✓	✓
Serial number	Designation	Specification	Unit	Quantity	32760077660 11 HD972-A9QL	32760077660 28 HD972-A9QL CY	32760077660 35 HD972-A9QL BR 220

卓力电器集团有限公司
CUORI ELECTRICAL APPLIANCES (GROUP) CO.,LTD.
Authorized Signature

47	Truckle axes	A3	PCS	4	✓	✓	✓
46	Truckle	PA66	PCS	4	✓	✓	✓
45	Screw	M5	PCS	3	✓	✓	✓
44	Pad	Φ5	PCS	2	✓	✓	✓
43	Screw	M5×18	PCS	2	✓	✓	✓
42	connecting sheet	1.2mm spcc	PCS	1	✓	✓	✓
41	Nut	M42	PCS	1	✓	✓	✓
40	Black lead cushion	graphite	PCS	1	✓	✓	✓
39	Heating tube BR 220V	220V 2000W	PCS	1			✓
	Heating tube CY	240V 2000W	PCS	1		✓	
	Heating tube international	230V 2000W	PCS	1	✓		
38	Fuse	250V 10A	PCS	1	✓	✓	✓
37	Cable clamp	0.3mm spcc	PCS	1	✓	✓	✓
36	Pad	Φ4	PCS	4	✓	✓	✓
35	Screw	M4×6	PCS	2	✓	✓	✓
34	Press line board	PP	PCS	1	✓	✓	✓
33	Press line cushion	PP	PCS	1	✓	✓	✓
32	Pad	Φ4	PCS	2	✓	✓	✓
31	Screw	BTP4×6	PCS	2	✓	✓	✓
30	Screw	BTP4×15	PCS	3	✓	✓	✓
29	Pad	Φ3	PCS	2	✓	✓	✓
28	Automatic temperature limiter	250V 10A	PCS	1	✓	✓	✓
27	stents	0.6mm spcc	PCS	1	✓	✓	✓
26	screw	STP3×5	PCS	2	✓	✓	✓
25	Stoneware	ceramic	PCS	1	✓	✓	✓
24	Line loop	SPVC	PCS	1	✓	✓	✓
23	Screw	BTP4*6	PCS	5	✓	✓	✓
22	Power plug type X / Power cord	BR 250V~ 16A H05RR-F 3×0.75mm²	PCS	1			✓
	Power plug type G / Power cord	BS 250V~ 13A H05RR-F 3×0.75mm²	PCS	1		✓	
	Power plug type E / Power cord	VDE 250V~ 16A H05RR-F 3×0.75mm²	PCS	1	✓		
21	Control line board	ABS+PC	PCS	1	✓	✓	✓
20	Screw	BTP3*16	PCS	2	✓	✓	✓
19	Switch knob	ABS	PCS	1	✓	✓	✓
18	Control panel	ABS+PC	PCS	1	✓	✓	✓
17	Strew plug	PVC	PCS	1	✓	✓	✓
16	Knob ornament	CD	PCS	2	✓	✓	✓
15	Knob cover	ABS	PCS	2	✓	✓	✓
14	Temperature knob	ABS+PC	PCS	1	✓	✓	✓
13	Screw	M3×8	PCS	2	✓	✓	✓
12	Switch temperature control bracket	ABS+PC	PCS	1	✓	✓	✓
11	Led Light	LED	PCS	2	✓	✓	✓
10	Control box	0.55mm spcc	PCS	1	✓	✓	✓
9	Tip-over Switch	250V/16A	PCS	1	✓	✓	✓
8	Fixing cap	ABS	PCS	8	✓	✓	✓
7	Screw	BTP3*10	PCS	14	✓	✓	✓
6	Temperature	250V/16A	PCS	1	✓	✓	✓
5	Switch	250V-16A	PCS	1	✓	✓	✓
4	Screw	M5×28	PCS	1	✓	✓	✓
3	Connecting frame	2.0mm spcc	PCS	1	✓	✓	✓
2	Flange	0.8mm spcc	PCS	1	✓	✓	✓
1	Container	0.5mm spcc	PCS	1	✓	✓	✓
Serial number	Designation	Specification	Unit	Quantity	32760077660 11 HD972-A9QL	32760077660 28 HD972-A9QL CY	32760077660 35 HD972-A9QL BR 220

Design	Li Yong	Date	2024.03.26	Version V0	CUORI
Darting	Shao ZhouBo			OIL ESSENTIAL 2000W Circuit diagram+Explosive view	HD972-A9QL
Audit	Li Yong				
Technology	Wang DaiBo	Approver	Liu GuangHui		

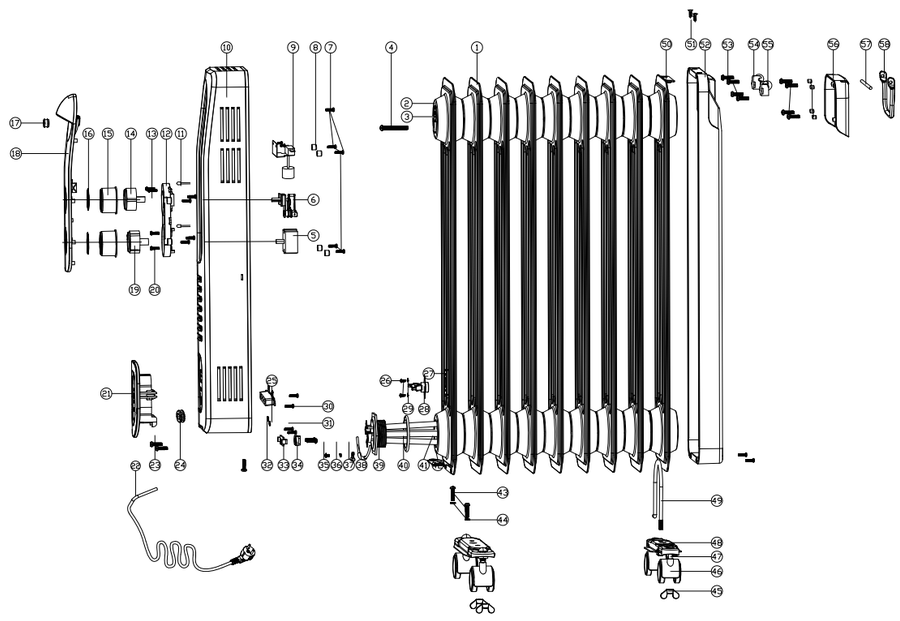

Spare parts

1	WHEELS KIT OIL ESSENTIAL 2000W	To create HD972SP	49	U screw	M5	1	PCS	✓	✓	✓
			48	Dead plate	1.0mm spcc	2	PCS			
			47	Truckle axes	A3	4	PCS			
			46	Truckle	PA66	4	PCS			
			45	Screw	M5	3	PCS			
N.	Designation	Matrix Code Technical Code (cuori code)	Serial number	Designation	Specification	Quantity	Unit	32760077660 11 HD972-A9QL	32760077660 28 HD972-A9QL CY	32760077660 35 HD972-A9QL BR 220

Products compatibility
Matrix Code
Technical code

卓力电器集团有限公司
CUORI ELECTRICAL APPLIANCES (GROUP) CO.,LTD.
Authorized Signature

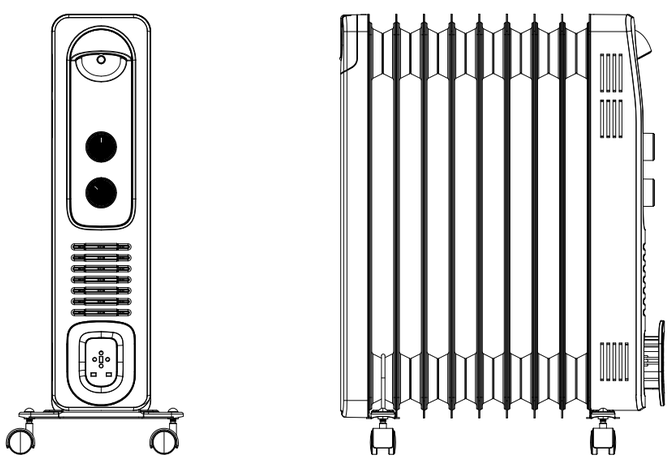

Matrix ID	Designation Short	Matrix Code	Technical Code(cuori code)
2022R08P04-0032	OIL ESSENTIAL - OIL HEATER 2000W WHITE EQUATION	32760077660 11	HD972-A9QL
2022R08P04-0087	OIL ESSENTIAL CY - OIL HEATER 2000W WHITE UK PLUG EQUATION	32760077660 28	HD972-A9QL CY
2023R08P06-0214	OIL ESSENTIAL -OIL HEATER WITH REAR COVER 2000W WHITE 220V,EQUATION	32760077660 35	HD972-A9QL BR 220

circuit diagram

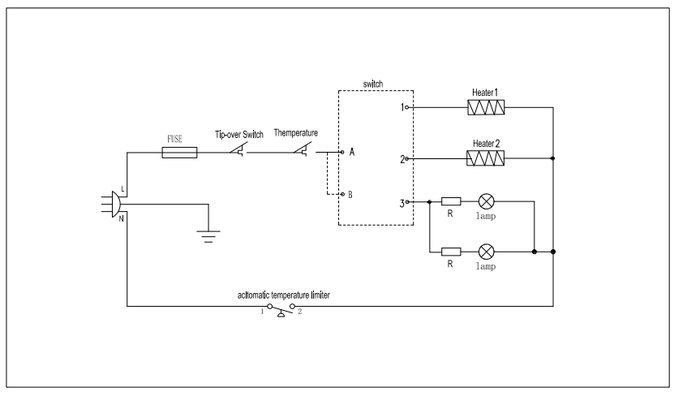

卓力电器集团有限公司
CUORI ELECTRICAL APPLIANCES (GROUP) CO.,LTD.
Authorized Signature