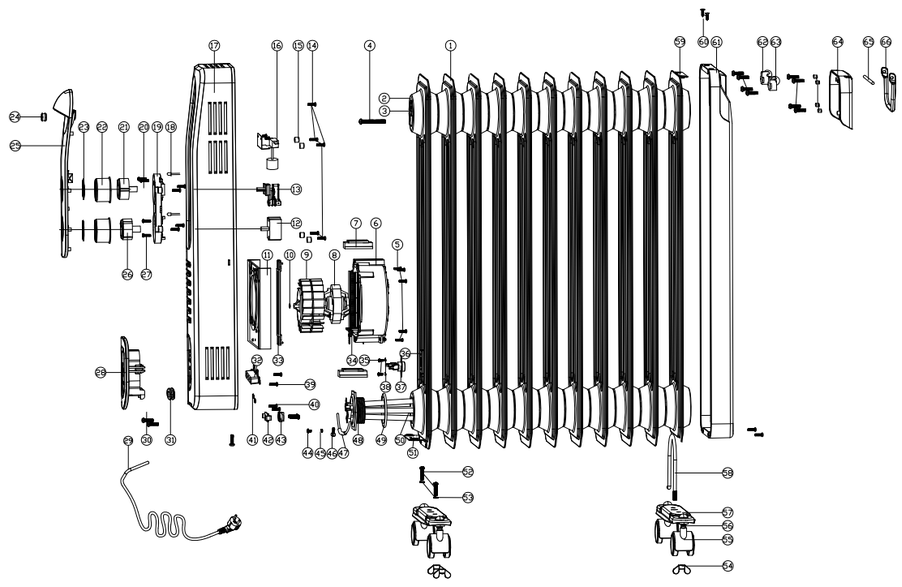

Serial number	Designation	Specification	Unit	Quantity	32760077661O3 HD972-A11QFL(BK)	3276007766097 HD972-A11QFL(WH)
66	Handle	metal	PCS	1	✓	✓
65	Axle	metal	PCS	1	✓	✓
64	Back panel	ABS	PCS	1	✓	✓
63	Right of axle lid	PP	PCS	1	✓	✓
62	Lift of axle lid	PP	PCS	1	✓	✓
61	Shell	T=0.6 spcc	PCS	1	✓	✓
60	Screw	ST3*12	PCS	2	✓	✓
59	Rear shell bracket	1.2mm spcc	PCS	1	✓	✓
58	U screw	M5	PCS	1	✓	✓
57	Dead plate	1.0mm spcc	PCS	2	✓	✓
56	Truckle axes	A3	PCS	4	✓	✓
55	Truckle	PA66	PCS	4	✓	✓
54	Screw	M5	PCS	3	✓	✓
53	Pad	Φ5	PCS	2	✓	✓
52	Screw	M5×18	PCS	2	✓	✓
51	connecting sheet	1.2mm spcc	PCS	1	✓	✓
50	Nut	M42	PCS	1	✓	✓
49	Black lead cushion	graphite	PCS	1	✓	✓
48	Heating tube international	230V 2500W	PCS	1	✓	✓
47	Fuse	250V 15A	PCS	1	✓	✓
46	Cable clamp	0.3mm spcc	PCS	1	✓	✓
45	Pad	Φ4	PCS	4	✓	✓
44	Screw	M4×6	PCS	2	✓	✓
43	Press line board	PP	PCS	1	✓	✓
42	Press line cushion	PP	PCS	1	✓	✓
41	Pad	Φ4	PCS	2	✓	✓
40	Screw	BTP4×6	PCS	2	✓	✓
39	Screw	BTP4×15	PCS	3	✓	✓
38	Pad	Φ3	PCS	2	✓	✓
37	Automatic temperature limiter	250V 16A	PCS	1	✓	✓
36	stents	0.6mm spcc	PCS	1	✓	✓
35	screw	STP3×5	PCS	2	✓	✓
34	PTC fever body	230V 50/60HZ 400W	PCS	1	✓	✓
33	Cover	PA66	PCS	1	✓	✓
32	Stoneware	ceramic	PCS	1	✓	✓
31	Line loop	SPVC	PCS	1	✓	✓
30	Screw	BTP4*6	PCS	5	✓	✓
29	Power plug type E / Power cord	VDE 250V~ 16A H05RR-F 3×1.0mm²	PCS	1	✓	✓
28	Control line board	ABS+PC	PCS	1	✓	✓
27	Screw	BTP3*16	PCS	2	✓	✓
26	Switch knob	ABS	PCS	1	✓	✓
25	Control panel	ABS+PC	PCS	1	✓	✓
24	Strew plug	PVC	PCS	1	✓	✓
23	Knob ornament	CD	PCS	2	✓	✓
22	Knob cover	ABS	PCS	2	✓	✓
21	Temperature knob	ABS+PC	PCS	1	✓	✓
20	Screw	M3×8	PCS	2	✓	✓
19	Switch temperature control bracket	ABS+PC	PCS	1	✓	✓
18	Led Light	LED	PCS	2	✓	✓
17	Control box	0.55mm spcc	PCS	1	✓	✓
16	Tip-over Switch	250V/16A	PCS	1	✓	✓
15	Fixing cap	ABS	PCS	8	✓	✓
14	Screw	BTP3*10	PCS	14	✓	✓
13	Temperature	250V/16A	PCS	1	✓	✓
12	Switch	250V~16A	PCS	1	✓	✓
11	Electric brace	0.55mm spcc	PCS	1	✓	✓
10	Jump ring	metal	PCS	1	✓	✓
9	Rotor	PA66	PCS	1	✓	✓
8	Motor	YJ58-A1 220-240V 50-60Hz	PCS	1	✓	✓
7	Ptc stoneware	ceramic	PCS	1	✓	✓
6	Duct	PA66	PCS	1	✓	✓
5	Screw	STP3×8	PCS	9	✓	✓
4	Screw	M5×28	PCS	1	✓	✓
3	Connecting frame	2.0mm spcc	PCS	1	✓	✓
2	Flange	0.8mm spcc	PCS	1	✓	✓
1	Container	0.5mm spcc	PCS	1	✓	✓

Design	Li Tong	Date	2024.03.26	Version V0	CUORI
Charting	Shao Zhoulu			OIL ESSENTIAL 2900W Circuit diagram+Explosive view	HD972-A11QFL
Audit	Li Tong				
Technology	Wang Dalho	Approver	Liu Guanghai		

卓力电器集团有限公司
CUORI ELECTRICAL APPLIANCES (GROUP) CO.,LTD.
Authorized Signature

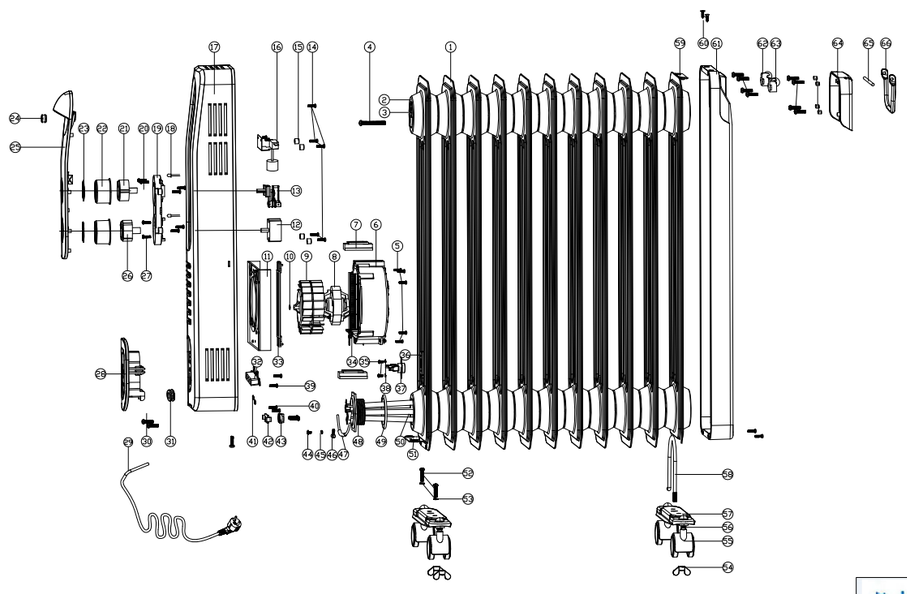

Spare parts

X_	Designation	Matrix Code Technical Code (cuori code)	Serial number	Designation	Specification	Quantity	Unit	32760077661O3 HD972-A11QFL(BK)	3276007766097 HD972-A11QFL(WH)
1	OIL ESSENTIAL 2900W WHEELS KIT	To create HD972SP	58	U screw	M5	1	PCS	✓	✓
			57	Dead plate	1.0mm spcc	2	PCS		
			56	Truckle axes	A3	4	PCS		
			55	Truckle	PA66	4	PCS		
			54	Screw	M5	3	PCS		

Products compatibility
Matrix Code
Technical code

卓力电器集团有限公司
CUORI ELECTRICAL APPLIANCES (GROUP) CO.,LTD.
Authorized Signature

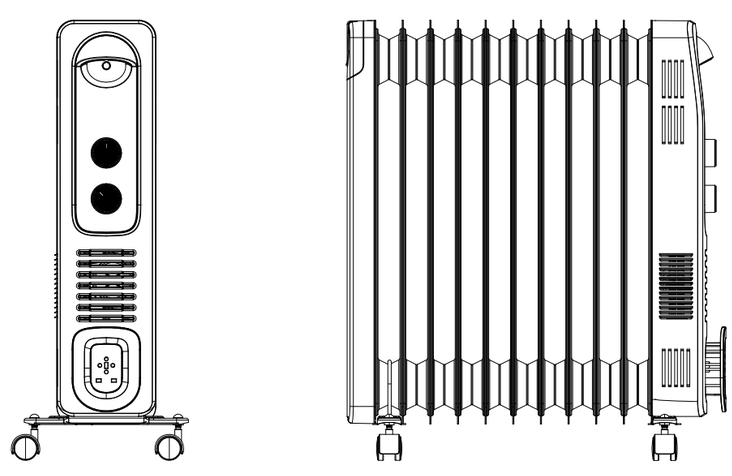

Matrix ID	Designation Short	Matrix Code	Technical Code(cuori code)
2022K08P04-0029	OIL ESSENTIAL - OIL HEATER 2900W TURBO BLACK EQUATION	32760077661O3	HD972-A11QFL(BK)
2022K08P04-0030	OIL ESSENTIAL - OIL HEATER 2900W TURBO WHITE EQUATION	32760077660097	HD972-A11QFL(WH)

circuit diagram

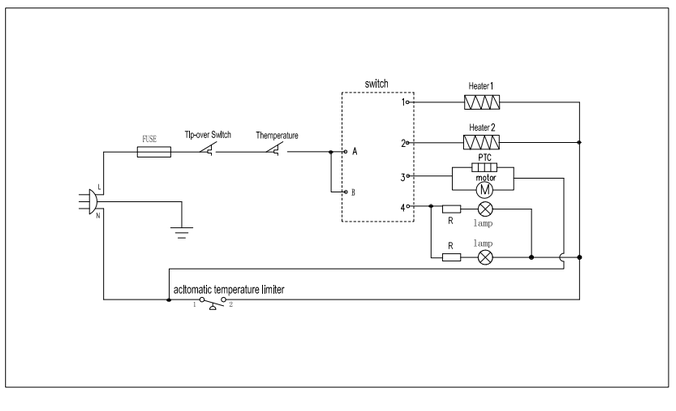

卓力电器集团有限公司
CUORI ELECTRICAL APPLIANCES (GROUP) CO.,LTD.
Authorized Signature