N°	Mould no	ADEO code	Description	Qty	Material	Size	Source of raw material	% of recycled material	surface treatment	part net welght
1	YJLD-2053	2025R09P12-0136	table frame leghorizontal tube	2	Aluminum	51*38*1.8*1875	TAIZHOU		heat transfer	1.532
2	YJLD-2053	2025R09P12-0136	table frame stand tube	2	Aluminum	51*38*1.8*970	TAIZHOU		heat transfer	0.793
3	YJLD-679A	2025R09P12-0136	inner frame leghorizontal support tube A	8	Aluminum	20*20*1.2*280	TAIZHOU		heat transfer	0.066
4	YJLD-679A	2025R09P12-0136	inner frame leghorizontal support tube B	4	Aluminum	20*20*1.2*280	TAIZHOU		heat transfer	0.066
5	YJLD-679A	2025R09P12-0136	inner frame stand support tube A	5	Aluminum	20*20*1.2*885	TAIZHOU		heat transfer	0.209
6	YJLD-1620	2025R09P12-0136	inner frame stand support tube B	2	Aluminum	80*18*1.2*885	TAIZHOU		heat transfer	0.616
7	YJLD-2502	2025R09P12-0136	leg tube	4	Aluminum	80*40*1.5*695	TAIZHOU		heat transfer	0.653
8	YJLD-2502	2025R09P12-0136	leg tube upper support	2	Aluminum	80*40*1.5*680	TAIZHOU		heat transfer	0.639
9	YJLD-2502	2025R09P12-0136	leg tube lower support	2	Aluminum	80*40*1.5*825	TAIZHOU		heat transfer	0.775
10	YJLD-2502	2025R09P12-0136	rung	1	Aluminum	80*40*1.5*1530	TAIZHOU		heat transfer	1.437
11	AL-054B	2025R09P12-0136	leg inclined tube	2	Aluminum	60*40*1.0*855	TAIZHOU		heat transfer	0.471
12	CP-751	2025R09P12-0136	adjusting knob	4	Aluminum					
13					Copoly merlzatlon					

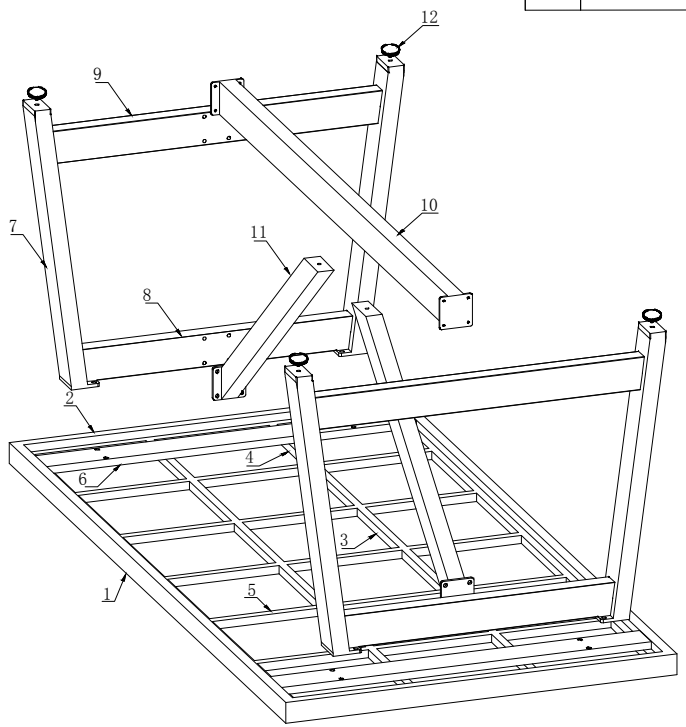

Rev	NAME	DATE
01		
02		
03		
04		
05		
06		

adeo ial
ADEO -135, rue Sadi Carnot
CS 00001 - 59790 RONCHIN
FRANCE

MATERIAU/FINISHING:

GENERAL TOLERANCES:
LINEAR:
ANGULAR:

TITRE:
HIGH DINING STOOL NATERIAL LOW BACK ALU WICKER WOOD EFFECT

No. DE PLAN 3276007784831

A3

REVISION

ECHELLE: 1/1 (Scale can be adapted) Dimensions in mm FEUILLE 1 SUR