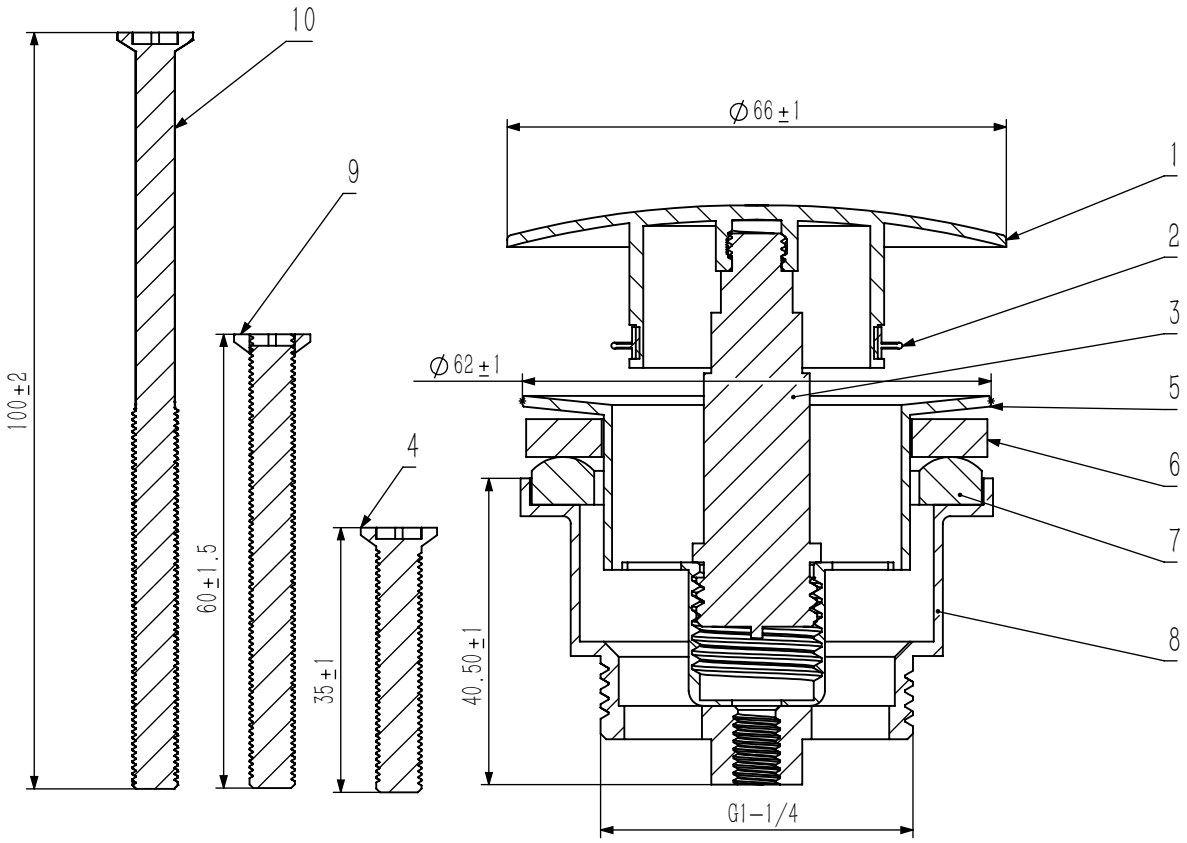

ITEM	PART NO.	DESCRIPTION	MATERIAL	QTY.	MARK
10		Screw 100mm	SS	1	SS Natural color
9		Screw 60mm	SS	1	SS Natural color
8		Body	HPb57-3	1	BLACK
7		Gasket	PVC	1	Transparent
6		Washer	Foam	1	White
5		Flange	SS201	1	BLACK
4		Screw 35mm	SS	1	SS Natural color
3		Core	HPb57-3	1	Brass Natural color
2		Gasket	NBR	1	BLACK
1		Cap	SS201	1	BLACK

CHROMED WASTE WITH BLACK ROUND COVER ADJUSTABLE WITH 3 SCREWS HEIGHT (mm) ADJUSTABLE 70-135 EQUATION

2025R03S02-0003