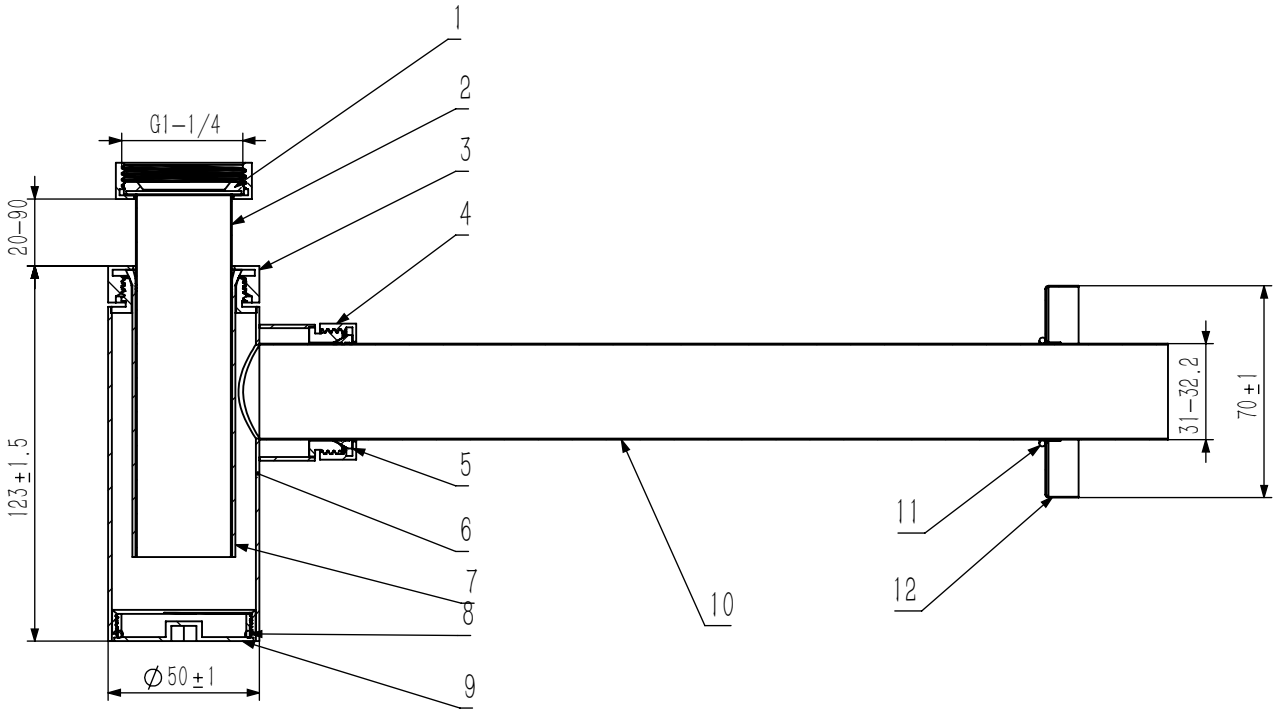

ITEM	PART NO.	DESCRIPTION	MATERIAL	QTY.	MARK
12		Decorative cover	SS201	1	BLACK
11		O-ring	Silica gel	1	WHITE
10		Pipe 300	SS201	1	BLACK
9		Bottom cap	HPb57-3	1	CHROMED
8		O-ring	NBR	1	BLACK
7		Pipe	Plastic	1	WHITE
6		Body	SS201	1	BLACK
5		Gasket	NBR	1	BLACK
4		Nut 45	HPb57-3	2	BLACK
3		Nut 50	HPb57-3	1	BLACK
2		Pipe 120mm	SS201	1	BLACK
1		Gasket	NBR	1	BLACK

SIPHON DESIGN WITH
ROSACE BLACK COLOR
HEIGHT (mm) EQUATION

2025R03S02-0023