RPD18C1-242S PERCEUSE PERCU 18V HP

5133006524 - RPD18C1-242S - 4000486659

4000486659

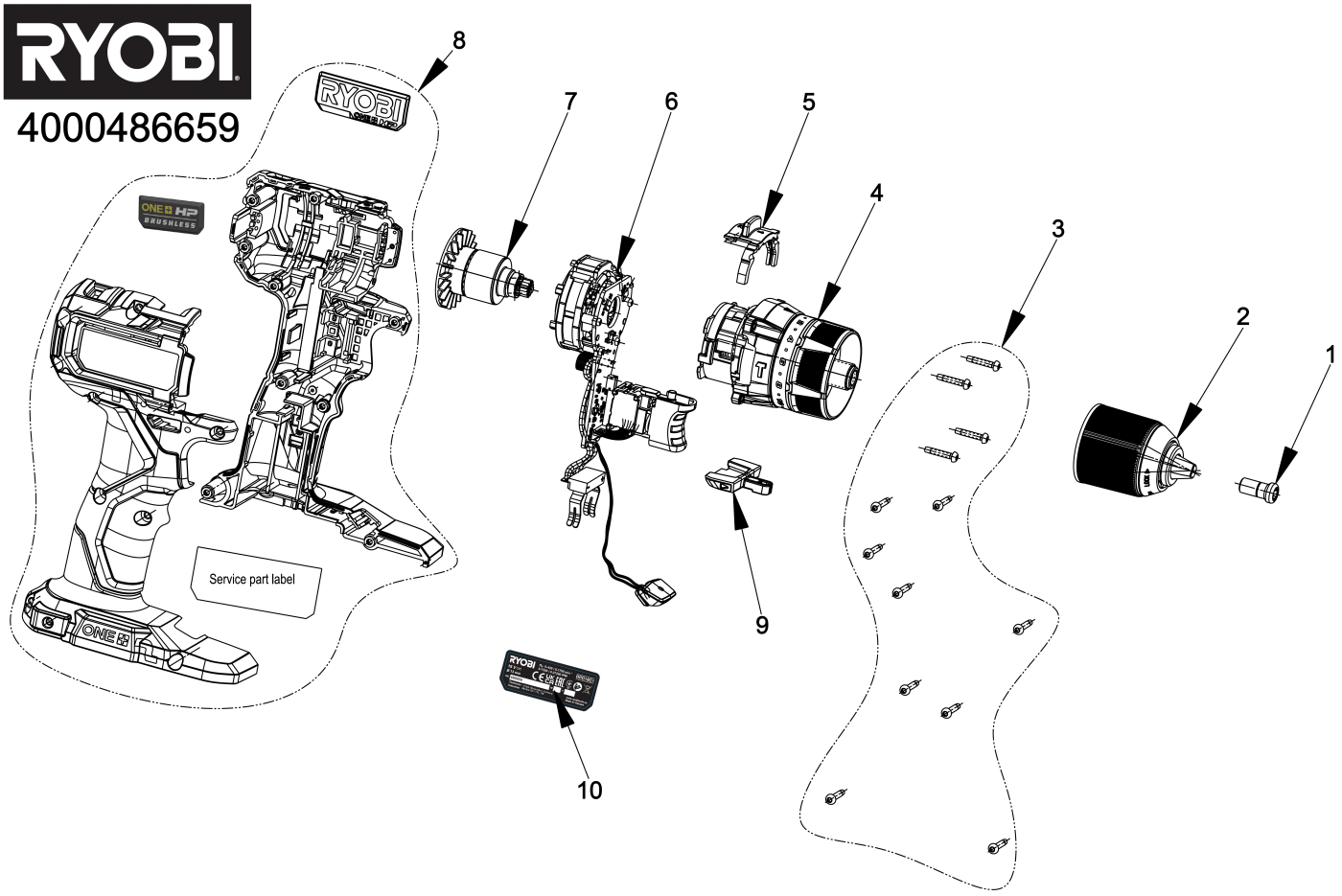

Position	Quantity	Description	Part number	EAN
1001 1	1	VIS	5131045028	4058546399498
1002 2	1	MANDRIN	5131048466	4058546545956
1003 3	13	VIS	5131048467	4058546545963
1004 4	1	ROUE	5131048472	4058546546014
1005 5	1	BOUTON	5131048469	4058546545987
1008 6	1	CARTER	5131048473	4058546546021
1009 7	1	BOUTON INVERSEUR	5131043949	4058546378851
1010 8	1	PLAQUE SIGNALETIQUE	5131048474	4058546546038