A	B	C	D	E	F	G	H	I	J
x1	x4	x4	x2	x2	x2	x3	x10	x10	x4

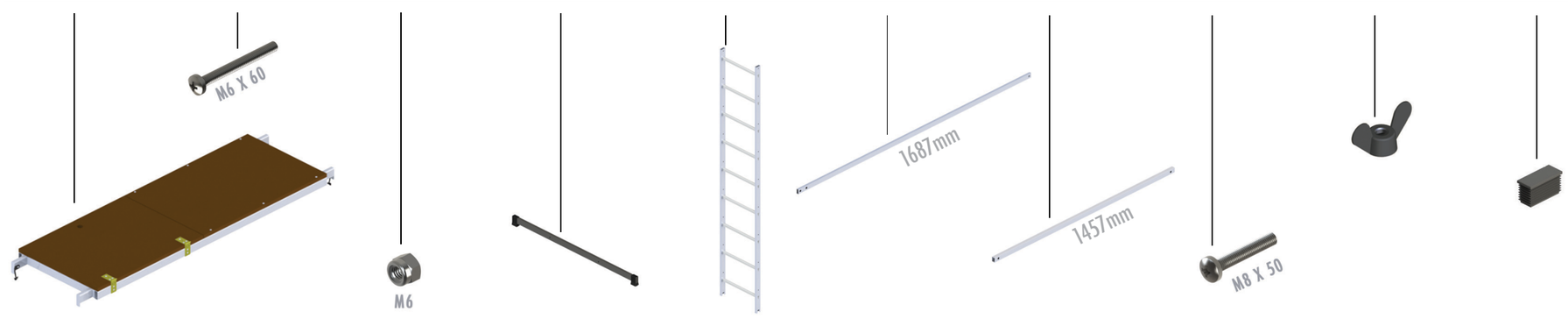

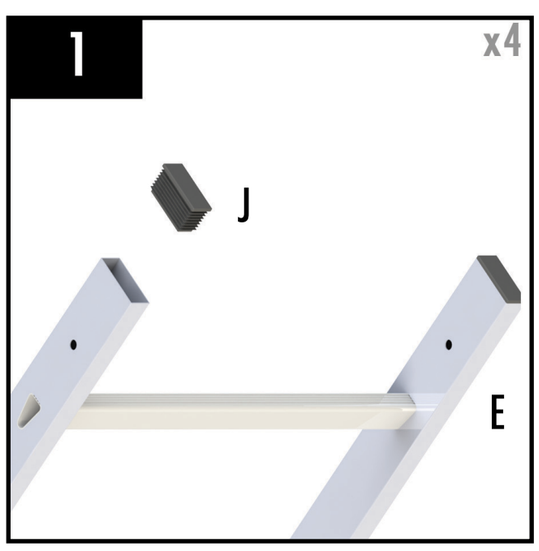

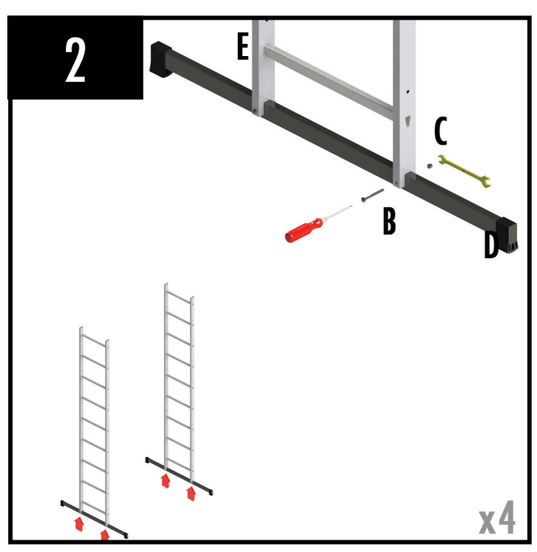

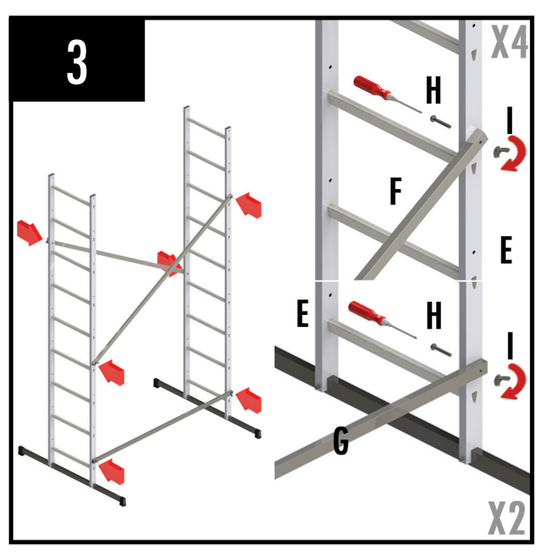

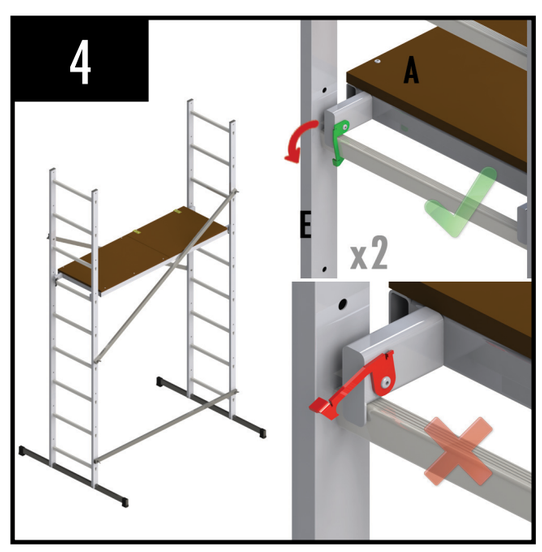

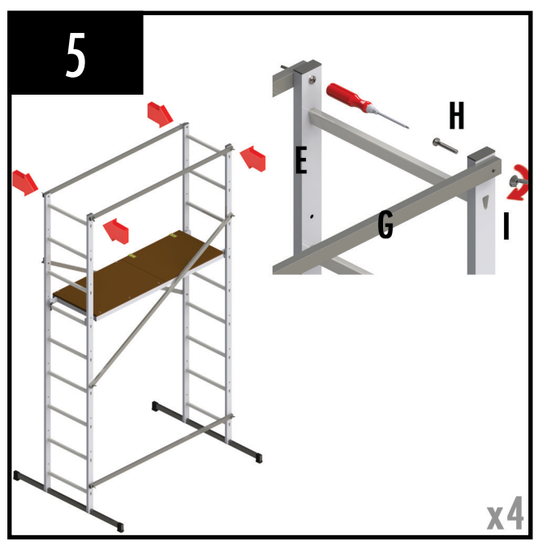

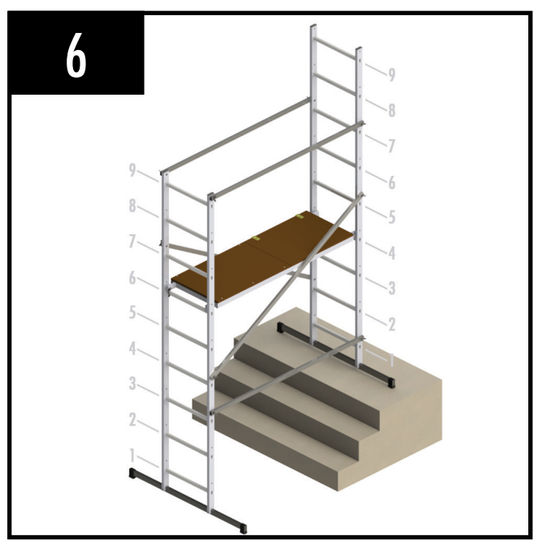

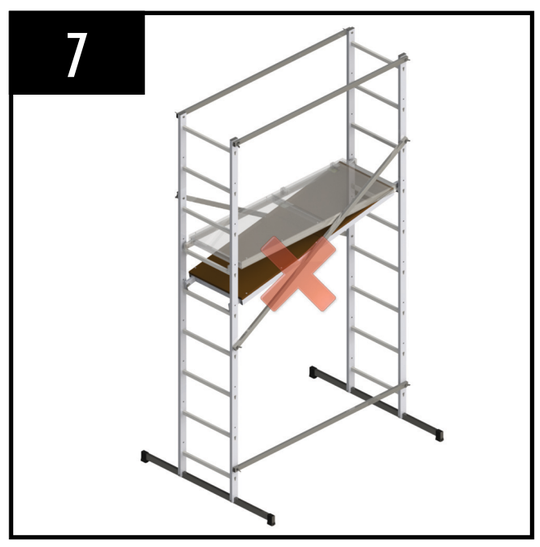

8