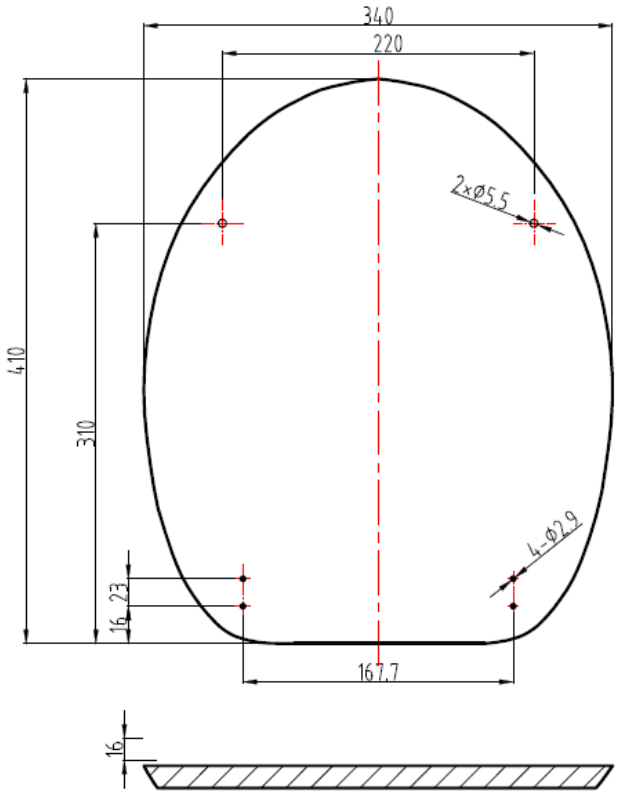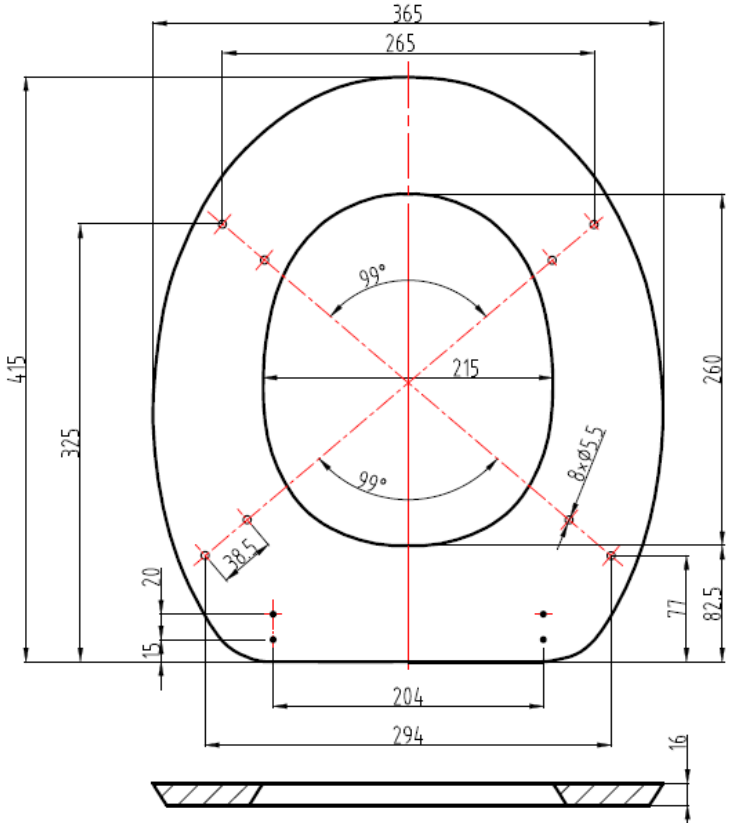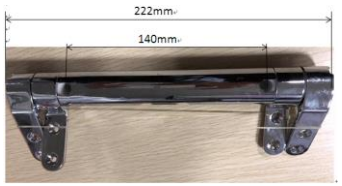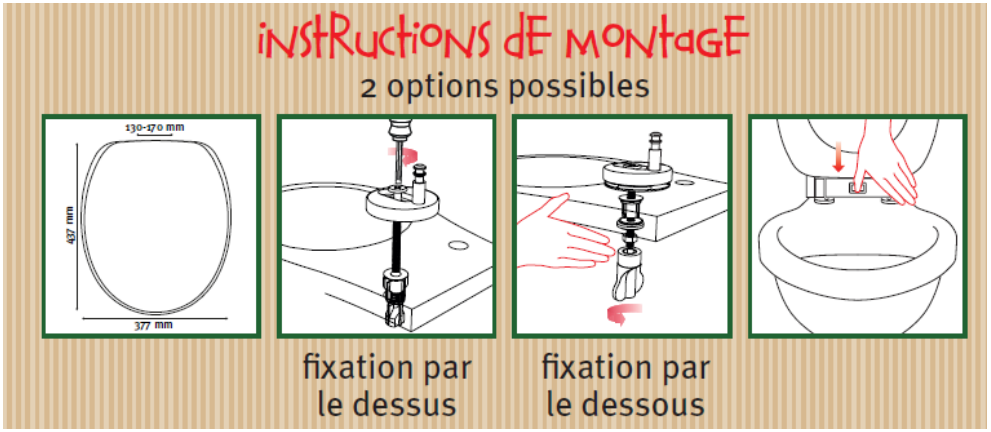FCD1B3000BBTEI