TRAEGER
WOOD FIRED GRILLS

RANGER OWNER'S MANUAL

SMOKE IT FORWARD
POST YOUR COOKS WITH
#TRAEGERGRILLS

A MAJOR CAUSE OF FIRES IS FAILURE TO MAINTAIN REQUIRED CLEARANCES (AIR SPACES) TO COMBUSTIBLE MATERIALS. IT IS OF UTMOST IMPORTANCE THAT THIS PRODUCT BE INSTALLED ONLY IN ACCORDANCE WITH THESE INSTRUCTIONS.

SAVE THESE INSTRUCTIONS

TFT18KLD

3643 Ranger UCGv02.indd 1 12/4/17 4:43 PM

IMPORTANT SAFETY

READ ALL INSTRUCTIONS BEFORE INSTALLING AND USING THE APPLIANCE

Please read this entire manual before installation and use of this pellet-burning appliance. Failure to follow these instructions could result in property damage, bodily injury, or even death. Contact local building or fire officials about restrictions and installation inspection requirements in your area.

Cooking with a hardwood fire will bring years of enjoyment to you, your family, and those lucky friends you will be cooking for. Your new Traeger Ranger Grill is specially designed to make cooking easier while giving you optimal performance with the most savory-flavored food.

As with all grills and cooking appliances, any time you burn a material—whether it be wood, gas, or charcoal—organic gases are formed during the cooking process. One gas that can be particularly harmful in concentrated quantities is carbon monoxide. In an outdoor, open-air environment, carbon monoxide should naturally dissipate and not harm you.

WARNING! Follow these guidelines to prevent this colorless, odorless gas from poisoning you, your family, or others:

- Know the symptoms of carbon monoxide poisoning: headache, dizziness, weakness, nausea, vomiting, sleepiness, and confusion. Carbon monoxide reduces the blood's ability to carry oxygen. Low blood oxygen levels can result in loss of consciousness and death.
- See a doctor if you or others develop cold- or flu-like symptoms while cooking or in the vicinity of this appliance. Carbon monoxide poisoning, which can easily be mistaken for a cold or flu, is often detected too late.
- Alcohol consumption and drug use increase the effects of carbon monoxide poisoning.
- Carbon monoxide is especially toxic to mother and child during pregnancy, infants, the elderly, smokers, and people with blood or circulatory system problems, such as anemia or heart disease.
- Only use your Traeger grill outdoors on a noncombustible floor and away from combustible materials.
- Never use gasoline, gasoline-type lantern fuel, kerosene, charcoal lighter fluid, or flammable liquids to start or "freshen up" a fire in this appliance. Keep all such liquids well away from this appliance when in use.

IMPORTANT: READ CAREFULLY AND RETAIN FOR FUTURE REFERENCE.
If you are assembling this unit for someone else, provide this manual for the owner to read and save for future reference.

DANGER!
For North American Consumers:

- Plug into an appropriate 3-prong outlet.
- An electrical supply with GFCI protection is required. To protect against shock hazard, locate a grounded 3-prong receptacle in reach of the 6' (1.8-m) power cord. When installing the receptacle, follow the National Electrical Code and local codes and ordinances.

For Consumers in the European Union:

- Plug into an appropriate earthed outlet.
- Do not remove earth prong or modify plug in any way. Do not use an adapter or extension cord.

DANGER!

- Hazardous voltage is present, which can shock, burn, or cause death. Disconnect the power cord before servicing the grill unless otherwise noted in this Owner's Manual.
- If the supply cord is damaged, it must be replaced by the manufacturer, service agent, or similarly qualified persons in order to avoid a hazard.
- Never use or store flammable liquids near the grill.
- Never use gasoline or lighter fluid to manually light your grill. Use **ONLY** alcohol gel for this procedure **AND** according to the instructions in the Owner's Manual.

3643 Ranger UCGv02.indd 2 12/4/17 4:43 PM

WARNING!
Many parts of the grill will become very hot during operation. Care must be taken to avoid burns, both during operation and afterwards, while the grill is still hot.

- **Never** leave the grill unattended when young children are present.
- **Never** move the grill when it is operating.
- Let the grill cool thoroughly before moving or attempting to transport.

WARNING!

- When operating this grill, maintain a **MINIMUM** distance of 12 inches (30 cm) from the grill to combustibles.
- When operating this grill under overhead combustibles, a **MINIMUM** distance of 40 inches (102 cm) is required.

WARNING!

- Assemble and operate this grill **ONLY** per the instructions in the Assembly Guide and this Owner's Manual.
- This grill is intended for OUTDOOR USE ONLY.
- Never use heating fuel pellets in the grill, due to potential hazardous contaminants and additives that may be present.
- For best results and flavor, use genuine Traeger Hardwood Pellets.

CAUTION!

- Always store wood pellets in a dry location, away from heat-producing appliances and other fuel containers.
- Keep the grill clean – See the cleaning instructions in this Owner's Manual.
- Do not use accessories not specified for use with this grill.

For Consumers in the European Union:

- This appliance is not intended for use by persons (including children) with reduced physical, sensory, or mental capabilities, or lack of experience and knowledge, unless they have been given supervision or instruction concerning use of the appliance by a person responsible for their safety.
- Children should be supervised to ensure they do not play with the appliance.

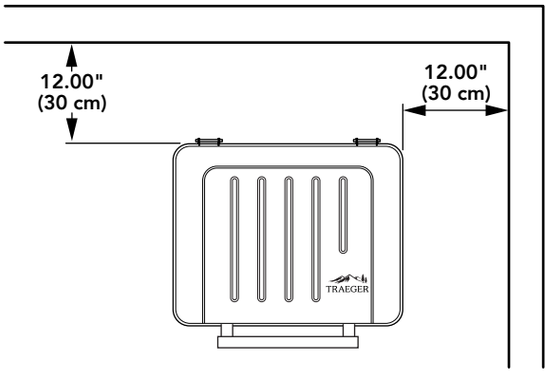

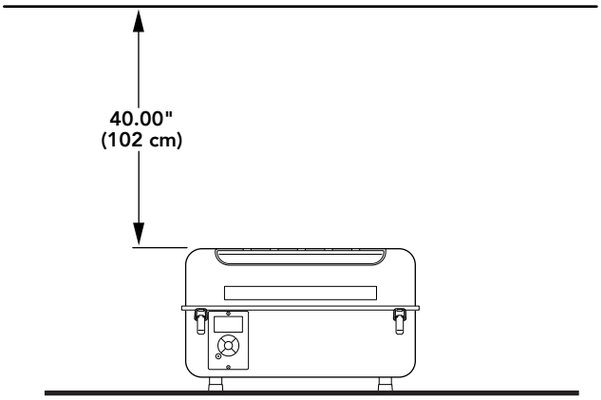

SAVE THESE INSTRUCTIONS

3643 Ranger UCGv02.indd 3
12/4/17 4:43 PM

WE'VE GOT YOU COVERED

TraegerGrills.com/Shop
TraegerGrills.com/Dealers

RUBS

PELLETS

SAUCES

3643 Ranger UCGv02.indd 4 12/4/17 4:43 PM

TABLE OF CONTENTS

2 Important Safety
6 Adding Flavor to Your Fire
8 Assembling Your Grill
10 Getting to Know Your Grill
13 Initial Firing Instructions
15 Subsequent Start Up
16 Using Your Grill
17 Using the Meat Probe
18 Ranger Features
20 Operating Tips
21 Troubleshooting
22 Maintaining Your Grill
24 Service and Warranty

Register your grill online for a FREE Traeger ebook

Go online at traegergrills.com/register

3643 Ranger UCGv02.indd 5 12/4/17 4:43 PM

ADDING FLAVOR TO YOUR FIRE

PELLETS

Creating 100% food-grade hardwood pellets comes naturally to Traeger. Our four U.S. mills process pure hardwood, blended for the perfect balance of smoke to heat and superior quality you can taste every time.

Crafting the highest-quality hardwood pellets on the market starts from the ground up. We built our plants in Oregon, Texas, and Georgia near the hardwood source, and we dedicate our manufacturing to food-grade pellets only, maintaining the purity of our machinery.

Traeger pellets contain two natural ingredients: our signature blend of hardwoods and a simple soybean oil. When manufacturing the premium hardwood pellets that elevate your meal to the next level, less is always more. No additives, no fillers, no binding agents — just simple, natural flavor.

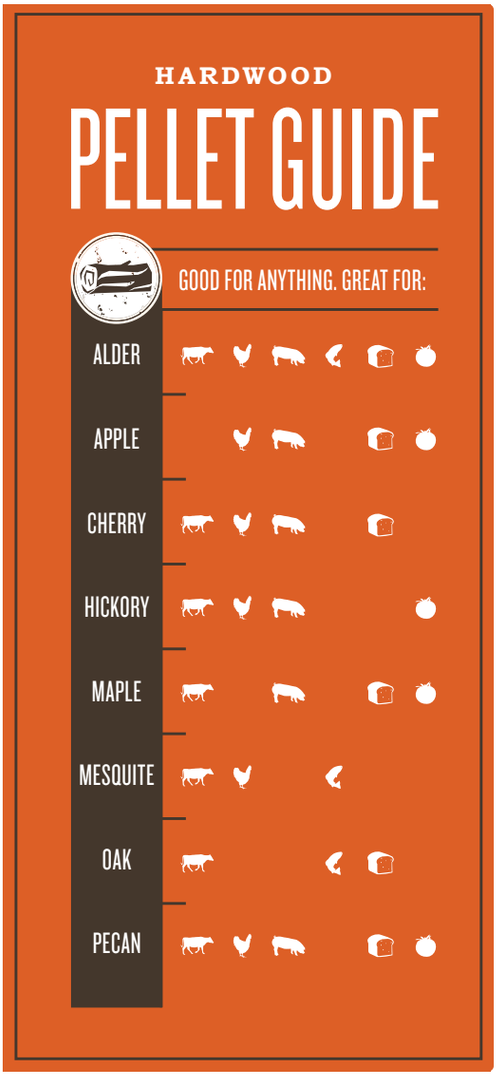

SPECIALTY SIZES

HICKORY
10-lb. (4.5-kg) box
PEL104

Our most popular pellet flavor now comes in an easy-to-transport 10-lb. box.

BIG GAME BLEND
33-lb. (15-kg) bag
PEL320

Traeger and Realtree have teamed up to bring you an exclusive blend of hickory and red and white oak, with woodsy rosemary undertones. This flavor is big enough for big game.

3643 Ranger UCGv02.indd 6 12/4/17 4:43 PM

20-LB (9-KG) BAGS

ALDER
20-lb. (9-kg) bag
PEL307

Versatile because of its mild flavor and aroma, alder gives off ample smoke without overwhelming even the most delicate flavors.

APPLE
20-lb. (9-kg) bag
PEL318

Most often used with poultry and pork, apple pellets offer a lightly sweet smoke that helps enhance mild-flavored meats.

CHERRY
20-lb. (9-kg) bag
PEL309

A very flavorful pellet, cherry wood lends itself to applications where you want to add a hearty smoke flavor.

HICKORY
20-lb. (9-kg) bag
PEL319

The most widely used pellets in barbecue, hickory pellets release a rich flavor that complements most meats.

MAPLE
20-lb. (9-kg) bag
PEL308

Mild, with a hint of sweetness, maple pellets are great for pork and especially veggies.

MESQUITE
20-lb. (9-kg) bag
PEL305

A favorite of Texas BBQ, mesquite pellets infuse your meat with a robust smoke flavor.

OAK
20-lb. (9-kg) bag
PEL310

Stronger than cherry or apple and lighter than hickory, oak is great to use with fish and beef.

PECAN
20-lb. (9-kg) bag
PEL314

Deliciously nutty and even a little spicy, pecan pellets are great with veggies, beef, pork, poultry, or even baked goods.

3643 Ranger UCGv02.indd 7
12/4/17 4:44 PM

ASSEMBLING YOUR GRILL

READ ALL INSTRUCTIONS BEFORE INSTALLING AND USING THE APPLIANCE

PARTS LIST

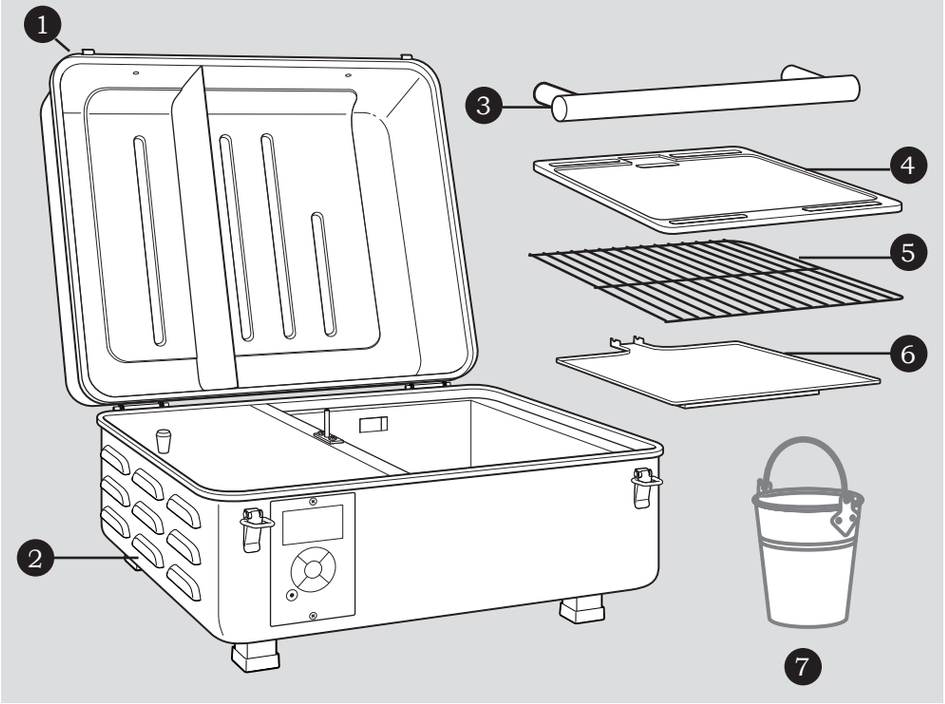

BLISTERPACK PARTS NEEDED

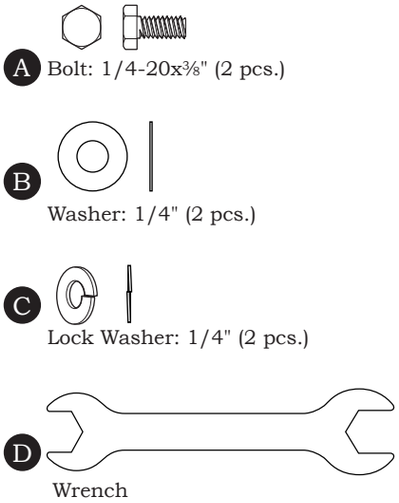

Part	Description
1	Grill Lid
2	Grill Body
3	Lid Handle
4	Cast-Iron Griddle
5	Grill Grate
6	Grease Drip Tray
7	Grease Bucket

Part	Description
A	Bolt: 1/4-20x⅜" (2 pcs.)
B	Washer: 1/4" (2 pcs.)
C	Lock Washer: 1/4" (2 pcs.)
D	Wrench

3643 Ranger UCGv02.indd 8 12/4/17 4:44 PM

1 INSTALL LID HANDLE

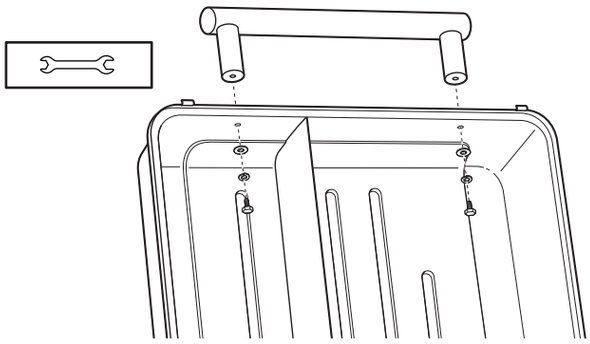

In this step: 3 A B C D

2 INSTALL GREASE DRAIN PAN AND BUCKET

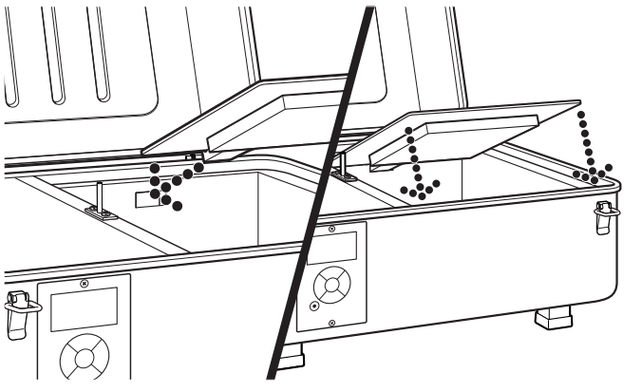

In this step: 6

NOTE: Be sure the grease drain spout on the grease drain pan extends through the opening in the back of the grill.
IMPORTANT: Always be sure to position the grease drain bucket under the spout during use!

3 INSTALL PORCELAIN-COATED GRILL GRATE

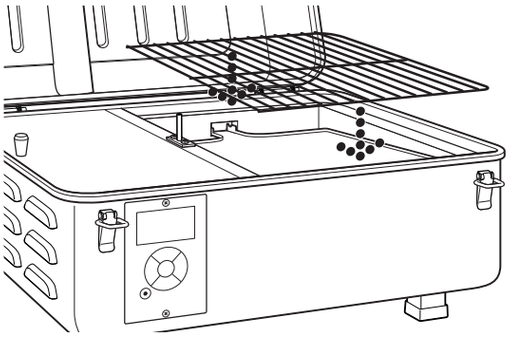

In this step: 5

3643 Ranger UCGv02.indd 9 12/4/17 4:44 PM

GETTING TO KNOW YOUR GRILL

GRILL PARTS AND FEATURES

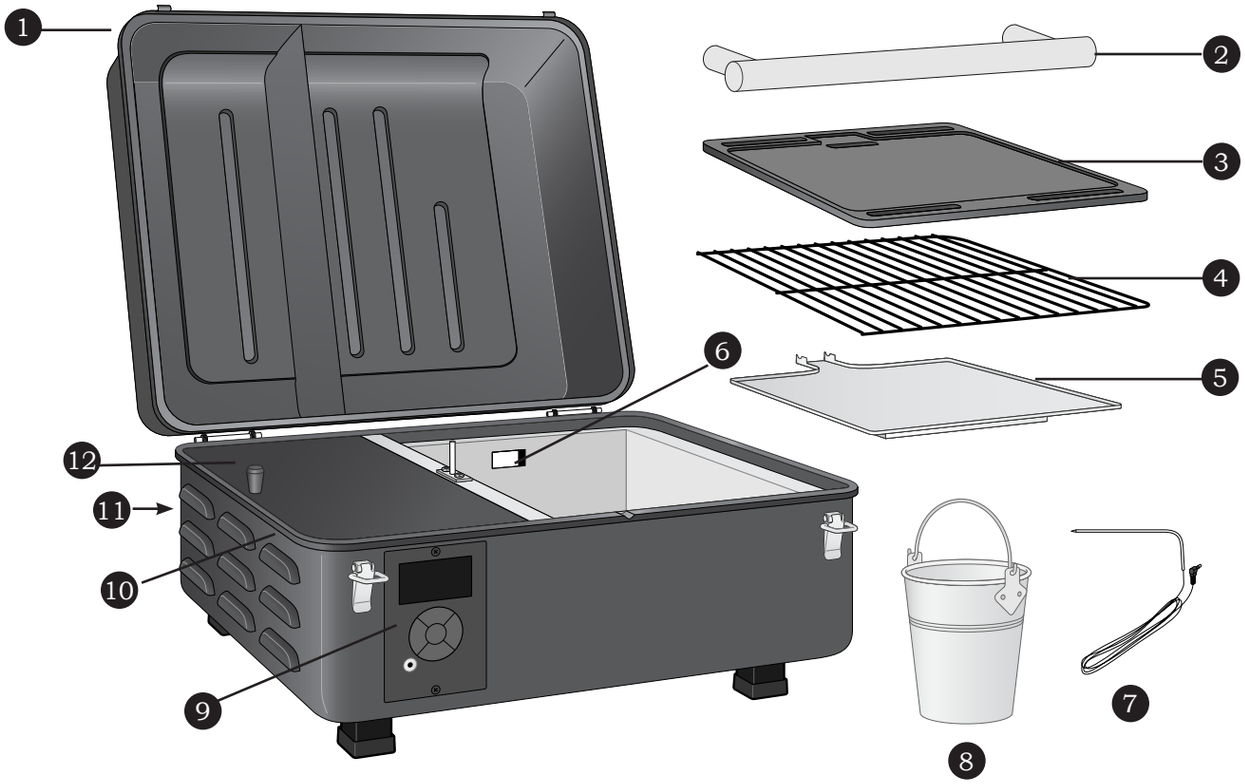

Part	Description
1	Grill Lid
2	Lid Handle
3	Cast-Iron Griddle
4	Grill Grate
5	Grease Drip Tray
6	Grease Drain Opening (back of grill)

Part	Description
7	Meat Probe
8	Grease Bucket
9	Arc D2 Controller with AGL
10	Pellet Hopper
11	Main Power Switch (back of grill)
12	Pellet Hopper Lid

3643 Ranger UCGv02.indd 10 12/4/17 4:44 PM

PELLET HOPPER

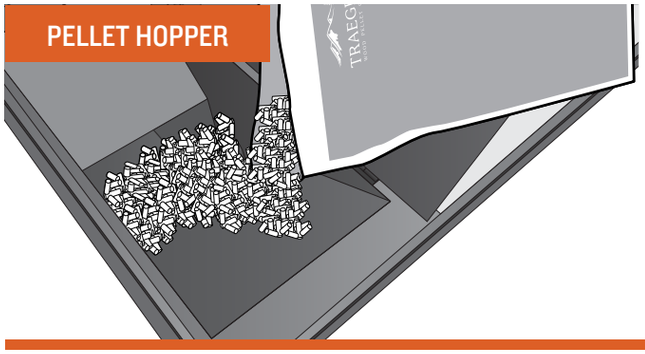

A 5-lb.-capacity (2.3 kg) pellet hopper will keep you cooking for hours, getting you away from the grill and back to entertaining friends and family.

COMPACT DESIGN

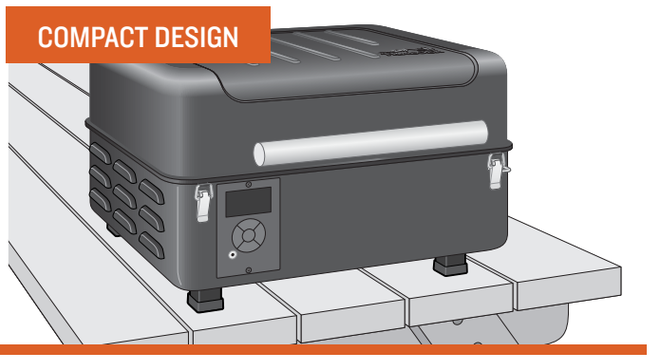

Take Traeger'ing on the go! The compact design is perfect for camping or tailgating, allowing you to enjoy that great Traeger flavor, no matter where you go.

GRILLING SPACE

With 184 in.^{2} (0.12 m^2) of grilling space, your Traeger Ranger Grill gives you 16,000 BTU of cooking power in a small footprint.

HIGH-TECH CONTROLS

Keep Warm can be used to pause the cook cycle at any time during grilling. Simply press KEEP WARM again to resume cooking. Keep Warm maintains the grill temperature at 165°F (74°C).

NO FIREFIGHTING

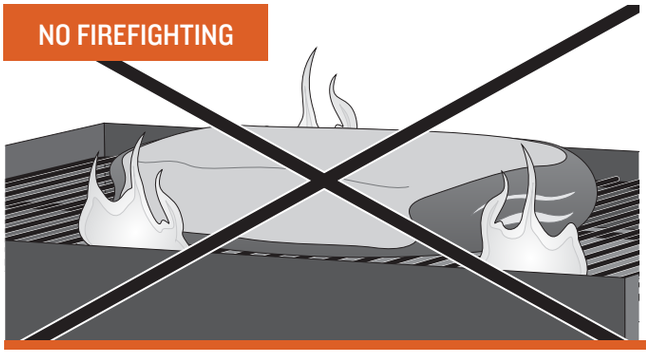

No more worrying about drippings flaring up and causing those nasty fireballs that destroy your meal. Traeger Wood Fired Grills are designed to cook by using indirect heat. All drippings are safely channeled into an external grease pan for easy disposal.

3643 Ranger UCGv02.indd 11 12/4/17 4:44 PM

GETTING TO KNOW YOUR GRILL (cont.)

YOUR CONTROL PANEL AND DISPLAY

Your Traeger Ranger Grill is equipped with a state-of-the-art Arc D2 Controller with AGL (Advanced Grilling Logic). Before you begin using the grill, it will be helpful to familiarize yourself with the different features of the control panel.

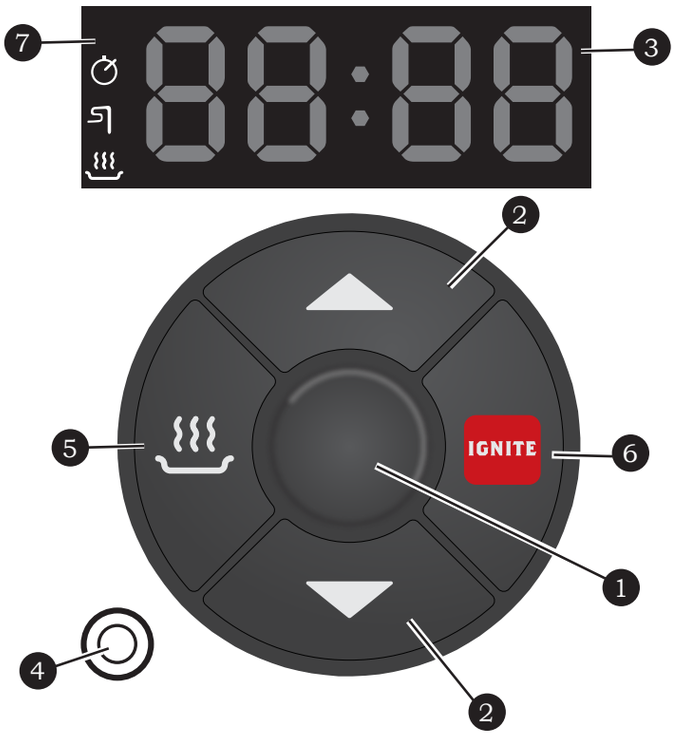

1 **CENTER BUTTON**
Use this button to turn on the grill and cycle through TEMPERATURE > TIMER > PROBE ALARM modes. Press and hold for two seconds to cancel a setting. To turn the grill off, press and hold button for two seconds in TEMPERATURE adjustment mode.

2 **UP/DOWN BUTTONS**
Press the UP/DOWN buttons to increase or decrease temperature or time. Press and hold to increase or decrease the time rapidly.
NOTE: Press and hold the up and down arrows at the same time for 3 seconds to switch between Celsius and Fahrenheit.

3 **STATUS DISPLAY**
Shows current temperature, time remaining in timer mode, or probe cooking temperature.

4 **MEAT PROBE**
Plug the probe in where indicated for probe cooking.

5 **KEEP WARM**
This feature maintains the grill temperature at 165°F (74°C) to keep food warm without overcooking it.

6 **IGNITE**
Press IGNITE to start the grill.

7 **INDICATOR LIGHT PANEL**
The icons on this panel will light up when the corresponding feature is active.

- The Timer icon will light when the timer is active.
- The Meat Probe icon will light once the probe is plugged in and recognized by the grill.
- The Keep Warm icon will light while this feature is active.

3643 Ranger UCGv02.indd 12 12/4/17 4:44 PM

INITIAL FIRING INSTRUCTIONS

To be used on initial firing or anytime the grill runs out of pellets. In order to ensure proper operation of the grill, you must first prime the pellet hopper's auger by allowing the auger tube to be “charged” with pellets.

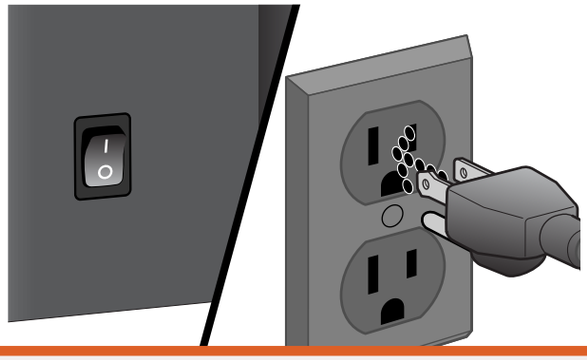

1. Remove the porcelain-coated grill grate or cast-iron griddle and grease drip tray from the inside of the grill.

2. With the Main Power switch in the OFF (**O**) position, plug the power cord into an appropriate grounded/earthed electrical outlet. Once the grill is plugged in, flip the Main Power switch to ON (**I**).

NOTE: Once you turn on your grill, it will enter Idle mode, and the display's dashed border will pulse. This indicates your grill is awaiting a command, and is not actively operating. The grill MUST be in Idle mode to prime the auger.

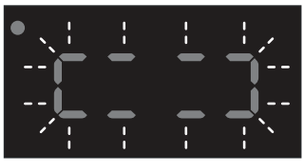

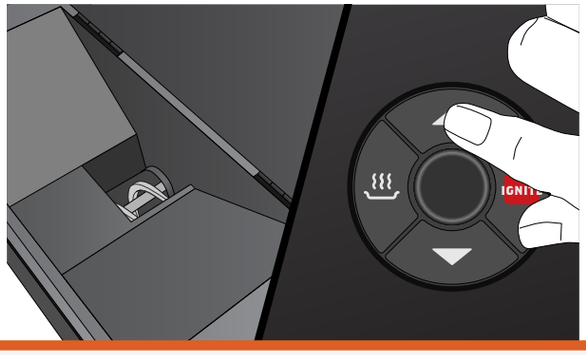

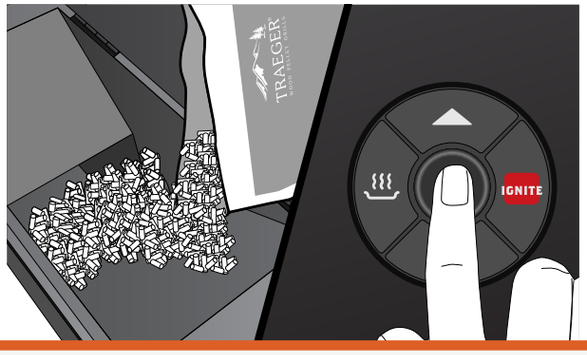

3. Make sure there are no foreign objects in the auger. With the grill in Idle mode, press and hold the UP and IGNITE buttons simultaneously. The display will flash "Pri" and the auger will begin priming.

4. Fill the hopper with your choice of Traeger Hardwood Pellets. The auger tube should take approximately 2 minutes to fill with pellets and begin dispensing into the Hot Pot.

   WARNING! Use ONLY Traeger® Hardwood Pellets. Never use heating fuel pellets in the grill.

3643 Ranger UCGv02.indd 13 12/4/17 4:44 PM

INITIAL FIRING INSTRUCTIONS (cont.)

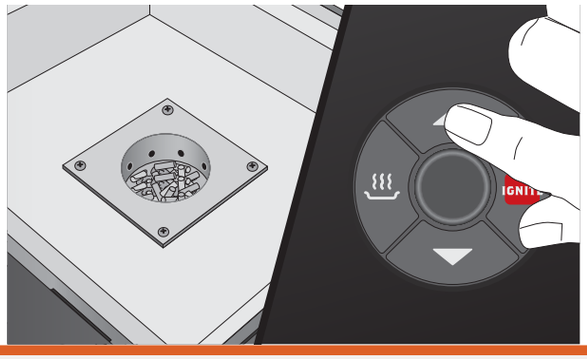

5 Continue priming until a small amount of pellets are in direct contact with the hot rod in the fire pot. Press and hold the UP and IGNITE buttons simultaneously to stop priming and return the grill to Idle mode.

6 Now you're ready to place the grease drip tray and porcelain-coated grill grates or cast-iron griddle back into the grill. Place the grease bucket under the grease drain on the back of the grease drip tray to catch grease drippings.

Recommendation: For easy cleanup, line the grease drip tray with Traeger Aluminum Drip Tray Liners or heavy-duty aluminum foil. If using foil, be sure the edges and ends of the foil are tight against the bottom of the grease drip tray. Replace foil after each cook to reduce the possibility of a grease fire. Please see "Maintaining Your Grill" on page 22 for more details.

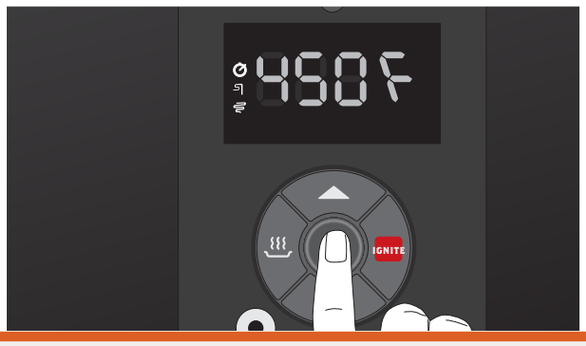

7 Press the UP button until the temperature display reads 450°F (250°C).

NOTE: To change between Celsius (C) and Fahrenheit (F), press and hold the UP and DOWN buttons simultaneously.

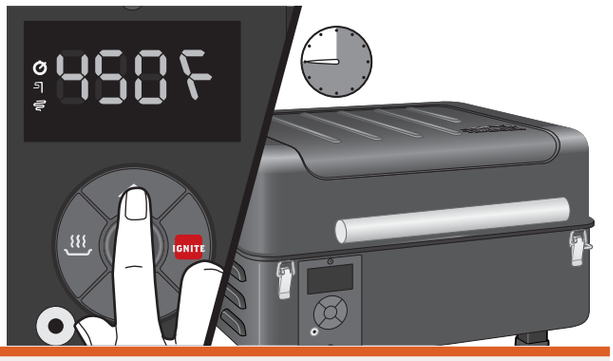

8 Press the IGNITE button. Let the grill run at 450°F (250°C) for 30 minutes with the lid closed to complete the seasoning process.

WARNING!

- When operating this grill, maintain a minimum clearance of 12 in. / 30.5 cm from grill to combustibles.
- For best results and flavor, always use genuine Traeger® Hardwood Pellets. Never use heating fuel pellets in the grill.
- Clean the grease drip tray frequently to reduce the possibility of a grease fire. Please see "Maintaining Your Grill" on page 22 for more details.

3643 Ranger UCGv02.indd 14 12/4/17 4:44 PM

INITIAL FIRING INSTRUCTIONS (cont.)

CONTROL SHUT-DOWN CYCLE

The control for this barbecue comes with an automatic shut-down cycle. When finished cooking on your barbecue, press and hold the Center button for 3 seconds. The display will flash OFF for several seconds, then scroll COOL DW followed by the actual temperature until the grill cools down to a safe temperature.

While the controller is flashing OFF, you can cancel the Shutdown Cycle by pressing and holding the Center button for two seconds.

Always allow the Shutdown Cycle to completely finish before powering off your grill at the power switch. The Shutdown Cycle ensures the fire is suppressed and the grill ignites properly on the next use.

DANGER! Turning off the power switch will cut power to the grill components only. When servicing the control or any other parts, ensure that the power supply is disconnected to avoid an electrical shock hazard.

SUBSEQUENT START-UP

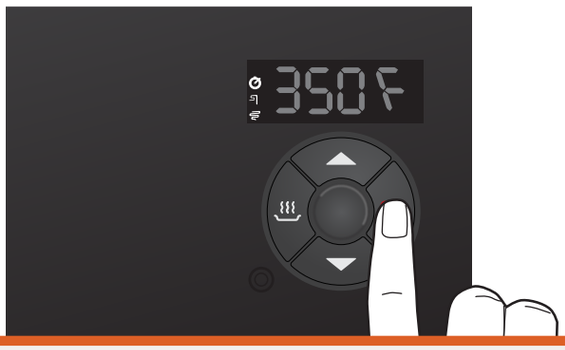

1. With the Power switch set to ON (**I**), press the Center button once to wake the grill controller. Set the desired temperature with the UP button.

2. Once the desire temperature is displayed, press IGNITE. Allow grill to preheat until desired temperature is achieved.

   NOTE: If the grill fails to achieve the selected temperature, please see “Operating Tips” on page 20 for more information.

NOTES:

- Once you press the IGNITE button, your Traeger Ranger Grill will always begin with an ignition and preheat cycle.
- **WARNING!** When operating this grill, maintain a minimum clearance of 12 in. / 30.5 cm from grill to combustibles.

3643 Ranger UCGv02.indd 15 12/4/17 4:44 PM

USING YOUR GRILL

You will need to start with these four steps every time you use your grill.

NOTE: Whenever your grill is not in use, it should be disconnected from the electrical outlet.

Plug appearance may vary by region.

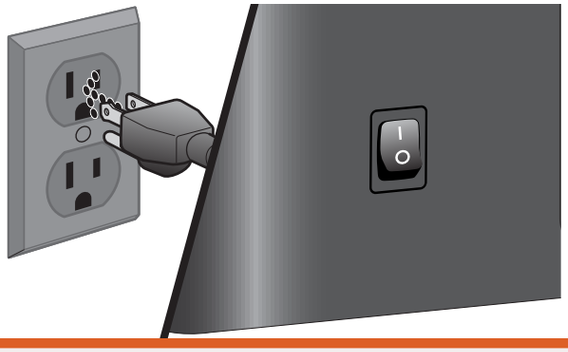

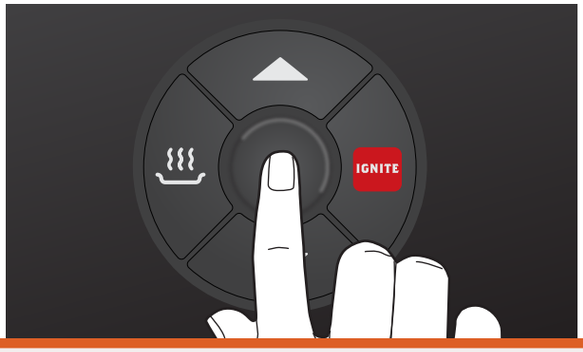

1. Plug power cord into an appropriate grounded/earthed electrical outlet and flip Main Power switch to ON (**I**).

2. Press the UP, DOWN, or Center button to wake the grill controller.

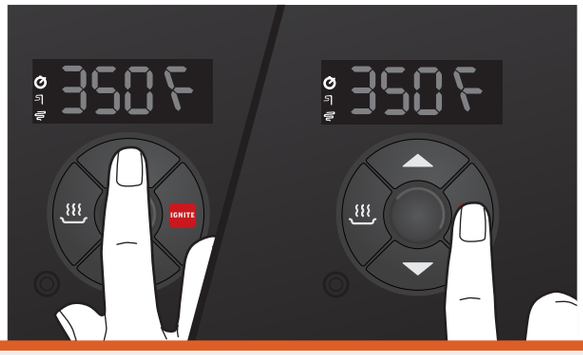

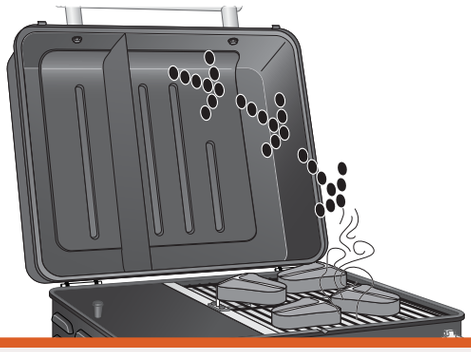

3. Once your grill is on, press the UP arrow to select your desired temperature, then press IGNITE to start the preheat cycle.

4. Once preheating is complete, load food into the grill and close the grill lid.

WARNING!

- When operating this grill, maintain a minimum clearance of 12 inches (30 cm) from grill to combustibles.
- Use ONLY Traeger® Hardwood Pellets, which are specifically made to work in our grills. Never use heating fuel pellets in the grill.

3643 Ranger UCGv02.indd 16 12/4/17 4:44 PM

USING THE MEAT PROBE

Your Traeger Ranger Grill includes a meat probe for monitoring internal food temperature, or for cooking to a goal temperature.

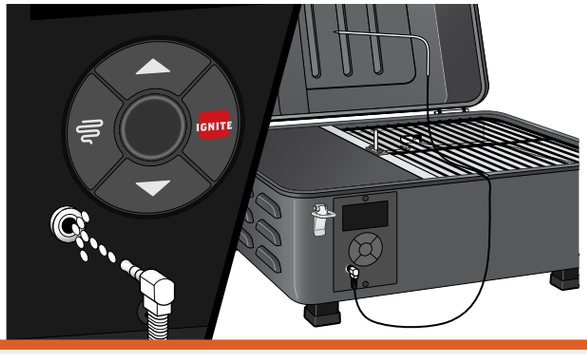

1 Insert the meat probe's plug into the socket on the lower left corner of the controller, then route the probe cable through the notch in the grill front, as shown.

2 Insert probe tip into meat. Make sure it is not in the fatty portion or touching bone, but is halfway into the thickest part of the meat.

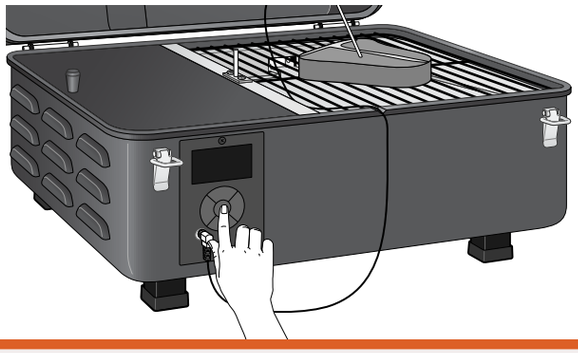

3 **Reading the temperature:** Press the Center button on the control. The probe temperature will display for 5 seconds then revert back to the temperature of the grill.

MEAT TEMPERATURE RECOMMENDATIONS

RANGE	BEEF	LAMB	PORK	POULTRY
Well	170°F / 77°C	160°F / 71°C	170°F / 77°C	170°F / 77°C
Medium	160°F / 71°C	155°F / 68°C	160°F / 71°C	170°F / 77°C
Medium Rare	145°F / 63°C	145°F / 63°C		170°F / 77°C
Rare	135°F / 57°C			170°F / 77°C

3643 Ranger UCGv02.indd 17 12/4/17 4:44 PM

RANGER FEATURES

IDLE MODE

Throughout this manual, you will be instructed to perform some actions while the grill is in Idle mode. When the grill is in Idle mode, the display's dashed border will pulse to indicate it is not actively operating and is awaiting a command. The grill automatically enters Idle mode when you first turn it on.

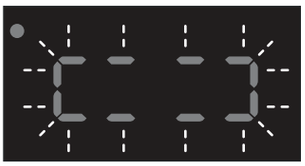

TIMER

Your Traeger Ranger Grill comes equipped with a convenient timer. The Timer function does not impact grill operation; you can use it to notify you of other needed steps during cooking, like loading vegetables into the grill or basting your food.

NOTE: When adjusting time, press and hold the UP or DOWN buttons to advance the time rapidly.

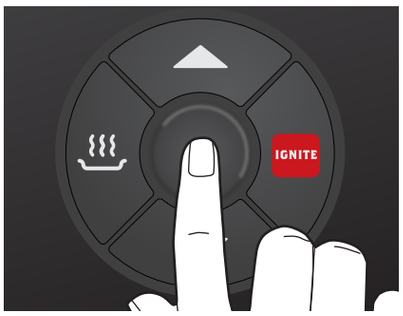

To set the Timer:

1. With the grill controller on, press the Center button once to enter Timer mode. The hours digits will flash.
2. Press the UP button to select hours; press the Center button to confirm and move to minutes.
3. Press the UP button to select minutes; press the Center button to confirm. The Timer icon will appear and time will begin counting down.

To cancel the Timer:

1. Press the Center button until the time remaining is displayed.
2. Press and hold the Center button for 2 seconds to cancel the Timer.

To adjust the Timer:

1. Press the Center button until the time remaining is displayed.
2. Use the UP or DOWN buttons to adjust the time as needed.
3. Press the Center button to confirm. The Timer icon will appear and time will resume counting down.

KEEP WARM

Keep Warm can be used to pause the cook cycle at any time during grilling. Simply press KEEP WARM again to resume cooking. Keep Warm maintains the grill temperature at 165°F (74°C).

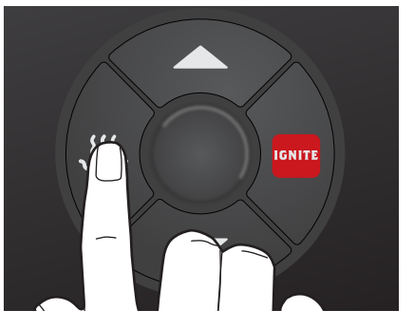

3643 Ranger UCGv02.indd 18 12/4/17 4:44 PM

CAST-IRON GRIDDLE

This versatile piece of cast iron cooking equipment makes cooking outdoors simple. It's pre-seasoned and distributes heat evenly for epic grilling experiences. The smooth cooking surface is perfect for frying up bacon and cooking pancakes, hash browns, and grilled cheese.

To use:

Simply lift out the porcelain grill grate and insert the cast-iron griddle into place, aligning the pin on the bottom of the griddle with the hole at the back of the grill.

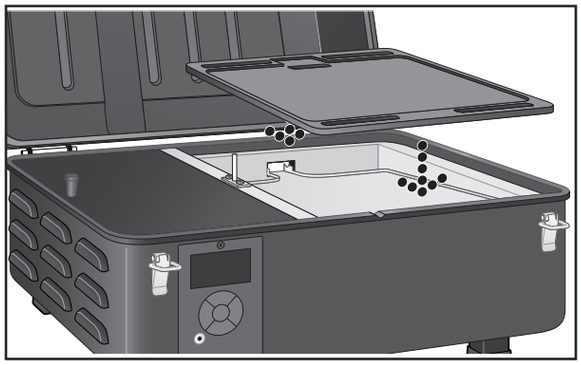

DRIP TRAY LINERS

Make grill maintenance a breeze with our Drip Tray Liners. Made of heat-proof aluminum, they're lightweight and disposable so you can clean up quickly and Traeger on. Liners should rest fully on the grease pan and not cover any areas outdoor of the grease pan. Doing so will affect the temperature and performance of the grill.

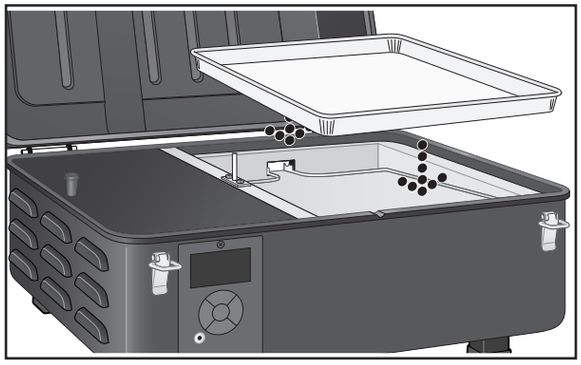

GRILL COVER

Protect your Traeger Ranger Grill with a premium custom cover, designed to withstand the elements. This durable grill cover is available for purchase at traegergrills.com.

3643 Ranger UCGv02.indd 19 12/4/17 4:44 PM

OPERATING TIPS

1. You can change the temperature at any time during grilling to increase or decrease cooking temperature.
   To change between Fahrenheit and Celsius:
   a. Press and hold the UP and DOWN buttons simultaneously for 3 seconds.
   b. Press the Center button to confirm and exit.
   You will now see temperatures displayed in the format you've chosen.
2. **WARNING!** Your Traeger Ranger Grill should never be moved while it is hot. If you are transporting your grill in a vehicle after cooking on it, make sure the fire is completely out and the grill is cold before placing it in any vehicle. Never put water into the firepot; it will jam the auger.
3. Your Traeger Ranger Grill is designed to operate with the lid closed. Cooking with the lid open greatly lengthens your cooking time.
4. **CAUTION!** Never add pellets by hand to a hot firepot. This is dangerous and you may be seriously burned. If you run out of pellets and lose your fire while cooking, refill the pellet hopper and refer to "Subsequent Startup" on page 15, allowing the grill to cool completely and start again.
5. **CAUTION!** Make sure the grease drip tray is properly seated on its locating brackets. If not seated properly, direct heat and flame could come up out of the firepot and cause a grease fire in the grill.

   Always take into account the type of food you are cooking:
   - Thin foods need high heat and shorter cook times, while thicker foods need low heat and longer cook times.
   - Vegetables take longer to cook than meats at the same cooking temperatures.
   - Always check that the internal temperature of the meat that you are cooking reaches safe temperatures to eat.
6. **WARNING!** If the fire in the firepot goes out while smoking and there is a sufficient amount of pellets still in the pellet hopper, it is important to complete the following instructions. Failure to do so may cause a hazardous "overfiring" of your grill due to an excess of unburned pellets in the firepot.

   DANGER! Turn the Main Power switch at the back of the grill to OFF (**O**) and disconnect the power cord. Allow the grill to cool thoroughly. Open the lid and remove all food, the grill grate, and the grease drip tray.

   WARNING! Remove all unburned pellets and ash from inside and around the firepot. (See instructions for proper handling and disposal of ash on page 22.)

   Before replacing grease drip tray and the grill grate, plug the power cord into an appropriate grounded electrical outlet and turn the switch ON (**I**). Pellets should fall into the firepot and the hot rod should begin to heat (it will start to turn red).

   CAUTION! Do not touch the hot rod.

   When flames start to come out of the firepot, turn the switch OFF (**O**). Let the grill cool down. Now you're ready to place the grease drip tray and grill grate back into the grill.
7. **CARBON MONOXIDE:**

   WARNING! Follow these guidelines to prevent this colorless, odorless gas from poisoning you, your family, or others.

   Know the symptoms of carbon monoxide poisoning: headaches, dizziness, weakness, nausea, vomiting, sleepiness, and confusion. Carbon monoxide reduces the blood's ability to carry oxygen. Low blood oxygen levels can result in loss of consciousness and death.

   See a doctor if you or others develop cold- or flu-like symptoms while cooking or in the vicinity of this appliance. Carbon monoxide poisoning, which can easily be mistaken for a cold or flu, is often detected too late.

   Alcohol consumption and drug use increase the effects of carbon monoxide poisoning.

   Carbon monoxide is especially toxic to mother and child during pregnancy, infants, the elderly, smokers, and people with blood or circulatory system problems, such as anemia or heart disease.

3643 Ranger UCGv02.indd 20 12/4/17 4:44 PM

OPERATING TIPS (cont.)

8. **GREASE MANAGEMENT:**
CAUTION! Grease fires are caused by not properly maintaining the grill and failing to clean the Traeger Grease Management System (TGMS) on a consistent basis (see "Maintaining Your Grill" on page 22). In the unlikely event of a grease fire while cooking, turn the grill off and keep the lid closed until the fire is completely out. Never keep the lid open during a grease fire. If the fire does not go out, lightly sprinkle baking soda on the fire.

CAUTION! Be careful not to burn yourself. If this does not put out the fire, carefully remove the food from the grill and keep the lid closed until the fire is completely out. Again, be careful not to burn yourself. When the grill is completely cool, remove all internal components. Clean any grease accumulation from the TGMS. Replace the grease drip tray and grill grates, restart the grill, and resume cooking.

TROUBLESHOOTING

Although rare, you may see an error message display on your control panel. Please refer to the following chart for potential issues and how to resolve them:

CODE	ERROR	SOLUTION
LEr	Low temperature	This will occur if the temperature of the grill falls below 120°F (49°C) for 10 minutes, causing the grill to go into shutdown mode. To fix, remove any pellets from the firepot. Turn the controller off and then on again and restart your grill. If the problem persists, call customer service.
HEr	High temperature	This error will occur when the temperature in the grill reaches temperatures above 550°F (288°C) for more than 45 seconds. Let the grill cool, then turn off the grill. Clear out any remaining pellets from the firepot and restart your grill. If the problem persists, call customer service.
Er1	Bad probe	Your probe will need to be replaced.
Er2	Thermocouple disconnected	Check the connection underneath the hopper for the thermocouple. If it is tight, your thermocouple will need to be replaced.
Er3	Failed to ignite	Check the connection of the hot rod. If the connection is good, then the hot rod will most likely need to be replaced
Er4	Fan disconnected	Check the connection of the fan. If the connection is good, then the fan will most likely need to be replaced.
Er5	Igniter disconnected	Check the connection of the hot rod. If the connection is good, then the hot rod will most likely need to be replaced.
Er6	Auger disconnected	Check the connection for the auger. If the connection is good, then auger motor will most likely need to be replaced.
Er7	Auger jammed	With the grill in Idle mode, press and hold the DOWN and IGNITE buttons at the same time. The display will flash "Clr" and the auger will cycle between moving forwards and backwards for 60 seconds to clear the jam. To stop the sequence before it is complete, press and hold the DOWN and IGNITE buttons at the same time.

3643 Ranger UCGv02.indd 21 12/4/17 4:44 PM

MAINTAINING YOUR GRILL

CREOSOTE AND GREASE FORMATION AND REMOVAL

When wood pellets are burned slowly, they produce tar and other organic vapors that combine with expelled moisture to form creosote. The creosote vapors condense in the relatively cool flue exhaust of a slow-burning fire. As a result, creosote accumulates on the flue lining. When ignited, creosote makes an extremely hot fire. Airborne grease particles will travel through the cooking chamber, and some of this airborne grease will accumulate on the flue lining, similar to creosote, which could be contributory to a fire.

Also, grease drippings from the food will fall onto the grease drip tray and be channeled into the grease drain and then out of the grill. These are the components of the Traeger Grease Management System (TGMS). Grease will accumulate in all of these locations.

All components of the TGMS should be inspected at least twice a year for signs of grease buildup. When creosote or grease has accumulated, it should be removed to reduce the risk of fire.

1. **CLEANING INSIDE SURFACES:**

   WARNING! Turn the switch OFF (**O**) and disconnect the power cord.

   CAUTION! Accumulated grease is easier to clean off when the grill is still warm—not hot. Be careful not to burn yourself. Gloves are recommended.

   Periodically clean the grease out of the grease drip tray and grease drain. If too much grease is allowed to build up in the grease drip tray or is allowed to plug the grease drain, a grease fire could result. We recommend cleaning these locations regularly.

   Remove the porcelain-coated grill grates and the grease drip tray. Scrape the grease accumulation from inside the grease drip tray using a stiff, nonmetallic tool. The drip tray may be washed in hot, soapy water. Wipe up remaining grease residue with paper towels or disposable rags. Paper towels or disposable rags can also be used to wipe some of the grease off of the interior surfaces of the grill.

2. **CLEANING OUTSIDE SURFACES:**

   DANGER! Turn the Main Power switch OFF (**O**) and disconnect the power cord.

   Use a disposable rag or cloth dampened with warm, soapy water to wipe the grease from the outside of the grill. DO NOT use oven cleaner, abrasive cleansers, or abrasive cleaning pads on the outside grill surfaces.

3. **OUTDOOR STORAGE:**

   CAUTION! If the grill is stored outdoors during the rainy season, care should be taken to ensure that water does not get into the pellet hopper. Wood pellets expand greatly when wet and will jam your auger. Always cover your grill with the Traeger Grill Cover when not in use. This custom-fit cover can be purchased at traegergrills.com.

4. **CLEANING THE GRILL GRATES:**

   CAUTION! Cleaning the grill grates works best while they are still warm. **Be careful not to burn yourself.** We recommend keeping a long-handled cleaning brush near the grill. After removing your food, give the grill grate a quick brushing. It takes only a minute and it will be ready the next time you want to use the grill.

5. **CLEANING THE ASH FROM INSIDE AND AROUND THE FIREPOT:**

   WARNING! Make sure that the grill is COLD before cleaning the ash.

   WARNING! Disposal of ashes should be done only according to the following instructions.

   Excess ash in the firepot may cause your fire to go out. The firepot should be inspected occasionally and cleaned to remove the ash buildup. Again, cleaning the ash from in and around the firepot should be done only when the grill is cold.

   Remove the grill grates, grease drip tray, and heat shield to provide access to the firepot and the interior of the grill. Much of the ash outside of the firepot can be removed from the grill with a small metal fireplace shovel or other similar tool.

   WARNING! A vacuum cleaner is the best way to remove ashes from the firepot, but this must be done with extreme care to avoid the risk of fire. Again, cleaning the ash from the firepot should be done only when the grill is cold.

   A utility-type, bagless vacuum cleaner with a metal collection canister would be best for this task. However, almost any vacuum cleaner will work safely if this procedure is properly followed.

   After ensuring that the ash in the firepot is cold, vacuum the ashes from the inside of the firepot.

3643 Ranger UCGv02.indd 22 12/4/17 4:44 PM

MAINTAINING YOUR GRILL (cont.)

a. If your vacuum cleaner is a bagless model, empty any previously accumulated debris from the collection chamber. Then vacuum the ashes from the inside of the firepot. Once the firepot is clean, empty the collection chamber into the metal container described below without delay. Make sure that there is no remaining ash residue left in the collection chamber.

b. If your vacuum cleaner is a model that uses a disposable bag, install an unused bag in the machine. Then vacuum the ashes from the inside of the firepot. Once the firepot is clean, remove the bag from the vacuum cleaner and place it in the metal container described below without delay.

6. DISPOSAL OF ASHES:

WARNING! Ashes should be placed in a metal container with a tight-fitting lid. The closed container of ashes should be placed on a noncombustible floor or on the ground, well away from all combustible materials, pending final disposal. When the ashes are disposed of by burial in soil or otherwise locally dispersed, they should be retained in the closed container until all cinders have cooled thoroughly.

3643 Ranger UCGv02.indd 23 12/4/17 4:44 PM

TRAEGER'S LEGENDARY VIP-365 customer service is the best out there. If you have any questions about your Traeger Ranger Grill or need tips on cooking your first Thanksgiving turkey, our seasoned experts have your back. We're here for you 365 days a year including holidays, because we're cooks — not bankers.

For 24/7 assistance with assembly or installation, parts, or customer service (English only, please), you can phone, email, or write us at:

TRAEGER'S VIP-365 CUSTOMER SERVICE
Phone: 1-800-TRAEGER
6:00 AM – 7:30 PM MT, 365 days a year (English)
Email: service@traegergrills.com

TRAEGER PELLET GRILLS LLC
1215 E. Wilmington Ave.
Salt Lake City, UT 84106

3643 Ranger UCGv02.indd 24 12/4/17 4:44 PM

TRAEGER
WOOD FIRED GRILLS

3-YEAR WARRANTY

Traeger Pellet Grills LLC warrants this barbecue grill against defects in material and workmanship under normal use and maintenance for a period of three (3) years from the date of original purchase.

Traeger Pellet Grills LLC will provide a replacement part for any part found to be defective. Original part(s) approved for return by Traeger's Parts Department must be returned prepaid.

This warranty does not include labor charges connected with the determination or replacement of defective parts, or freight charges to ship these parts.

Traeger Pellet Grills LLC shall not be liable under this or any implied warranty for incidental or consequential damages. This warranty gives the retail customer specific legal rights and the customer may have other rights which vary from state to state.

This warranty shall be void if the unit is not assembled or operated in accordance with the operation instructions provided with this unit; the unit is resold or traded to another owner; components, or accessories not compatible with the unit have been used; the unit has been used in a commercial or food service application; or the user has abused or otherwise failed to maintain the unit.

To process a warranty claim, Traeger Pellet Grills LLC may require proof of your date of purchase. You should retain your sales slip or invoice along with this certificate with your valuable documents.

3643 Ranger UCGv02.indd 25 12/4/17 4:44 PM

NOTES

3643 Ranger UCGv02.indd 26 12/4/17 4:44 PM

NOTES

3643 Ranger UCGv02.indd 27 12/4/17 4:44 PM

TRAEGER
WOOD FIRED GRILLS

LIVE FLAVOR FULL

FOLLOW US @TRAEGERGRILLS

Traeger Pellet Grills LLC
1215 E. Wilmington Ave.
Salt Lake City, UT 84106

traegergrills.com